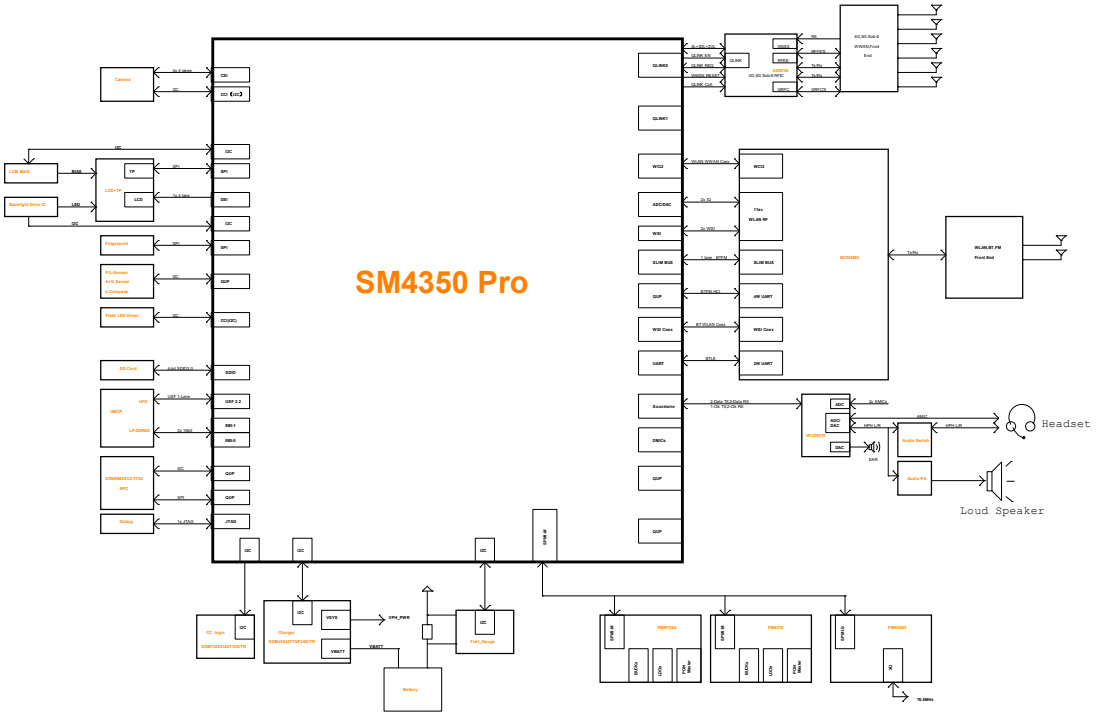
SM4350 Pro
Camera
LCM MIPI
Backlight Drive IC
LCD+TF
Fingerprint
ALS,Sensor
&HS Sensor
e-Compass
Flash LED Driver
SD Card
UFS
UMCP
LP-DDR5X
SIM/NM25C21-VT30
NFC
Debug
CSI
CCI (I3C)
I2C
SPI
DSI
DSI0
GPIO
SDIO
USB 2.3
SSC-1
SSC-0
JTAG
CLK0
CLK1
CLK2
CLK3
CLK4
CLK5
CLK6
CLK7
CLK8
CLK9
CLK10
CLK11
CLK12
CLK13
CLK14
CLK15
CLK16
CLK17
CLK18
CLK19
CLK20
CLK21
CLK22
CLK23
CLK24
CLK25
CLK26
CLK27
CLK28
CLK29
CLK30
CLK31
CLK32
CLK33
CLK34
CLK35
CLK36
CLK37
CLK38
CLK39

GPIO	I2C网络	位号	功能	优先级	型号	供应商	料号	I2C地址(7bit)	W/写地址	R/读地址	备注
GPIO_4 GPIO_5	APPS_I2C_SDA APPS_I2C_SCL	U2401	15W Switch Charger	1st	SGM41543DYTQF24G/TR	SGM	TBD	0x0B	0x16	0x17	
		U2402	CC logic	1st	SGM7220XUQT12G/TR	SGM	1810AA000110	0x67	0xCE	0xCF	
		U2403	PD Controller	1st	RT1715WSC	RICHTEK	1810AA000050	0x4E	0x9C	0x9D	
		U2801	PA FOR REC	1st	AW88261FCR	AWINIC	1710AA000074	0x35	0x6A	0x6B	
		U2802	PA FOR SPK	1st	AW88261FCR	AWINIC	1710AA000074	0x34	0x68	0x69	
GPIO_19 GPIO_20	FUGE_I2C_SDA FUGE_I2C_SCL	U3801	电量计	1st	CW2217BAAC	Cellwise	1614AA000019	0x64	0xC8	0xC9	
GPIO_27 GPIO_28	NFC_BIAS_I2C_SDA NFC_BIAS_I2C_SCL	U2702	LCM BIAS	1st	AW37501CSR	AWINIC	1610AA000150	0x3E	0x7C	0x7D	
				2nd	OCP2131BWPAD	OCS	1610AA000102	0x3E	0x7C	0x7D	
		U6400	NFC	1st	PN557	NXP	TBD	0x28	0x50	0x51	
GPIO_39 GPIO_40	CCI_I2C_SDA0 CCI_I2C_SCL0	J3403	Rear Camera 16M/50M	1st		Qtech		I2C地址 芯片 0x5A(W)/0x5B(R) I2C地址 Driver IC 0x18(W)/0x19(R) I2C地址 EEPRON 0xB0(W)/0xB1(R)			
				2nd		Ofilm		I2C地址 芯片 0x5A(W)/0x5B(R) I2C地址 Driver IC 0x18(W)/0x19(R) I2C地址 EEPRON 0xB0(W)/0xB1(R)			
GPIO_41 GPIO_42	CCI_I2C_SDA1 CCI_I2C_SCL1	J3404	2M Macro	1st	SL02D0JC	三赢兴		I2C地址 芯片 0x78(W)/0x79(R) I2C地址 Driver IC NA I2C地址 EEPRON NA			
				2nd	PV2F2006	天实		I2C地址 芯片 0x78(W)/0x79(R) I2C地址 Driver IC NA I2C地址 EEPRON NA			
		U1901	Flash LED Driver	1st	AW36515AFCR	艾为	1615AA000045	0x63	0xC6	0xC7	
				2nd	OCP91373WPAD	OCS	1615AA000022	0x63	0xC6	0xC7	
GPIO_43 GPIO_44	CCI_I2C_SDA2 CCI_I2C_SCL2	J3401	Front Camera		C18F40	丘钛		I2C地址 芯片 0x5A(W)/0x5B(R) I2C地址 Driver IC NA I2C地址 EEPRON NA			
					P58F1313	天实		I2C地址 芯片 0x5A(W)/0x5B(R) I2C地址 Driver IC NA I2C地址 EEPRON NA			
GPIO_142 GPIO_143	SENSOR_I2C0_SDA SENSOR_I2C0_SCL	U3501	A+G Sensor	1st	ICM-42607-P	TDK	2592AA000056	0x68	0xD0	0xD1	
				2nd	BMI320	BOSCH	2592AA000044	0x68	0xD0	0xD1	
		U3502	e-Compass	1st	QMC6308P	QST	2592AA000081	0x2C	0x58	0x59	
GPIO_150 GPIO_151	SENSOR_I2C_SDA SENSOR_I2C_SCL	U3503	PL SENSOR	1st	MN78912DKDN	EMINENT	2591AA000179	0x41	0x82	0x83	
		U3505	Barometer	1st	ICP-20100-B	TDK	TBD	0x64	0xC8	0xC9	
				2nd	BMP580	BOSCH	2591AA000210	0x47	0x8E	0x8F	
		U4001	SAR SENSOR	1st	SX9375	SEMTECH	2591AA000150	0x2C	0x58	0x59	

1103

Title	02.I2C TABLE	REV: V0.1
DOCUMENT NO.:	PENANG_M331_MB PVT_C5-4 1220	Size B
DEPARTMENT: DEPARTMENT	DESIGNER: DESIGNER	
龙旗科技 LONGCHEER		
Date: Monday, September 05, 2022	Sheet 2 of 66	

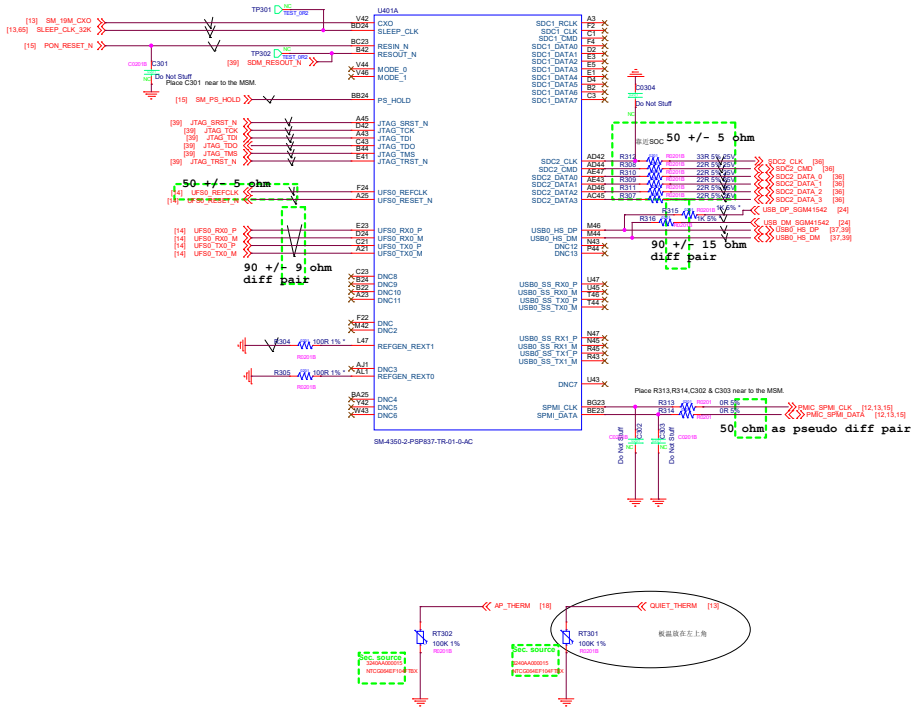

1103

Title	03.SM4350_AC_CONTROL	REV: V0.1	
DOCUMENT NO.:	PENANG_M331_MB PVT_C5-4 1228	Size C	
DEPARTMENT:	DEPARTMENT	DESIGNER:	DESIGNER
龙旗科技 LONGCHEER			
Date: Wednesday, November 02, 2022	Sheet 3 of 66		

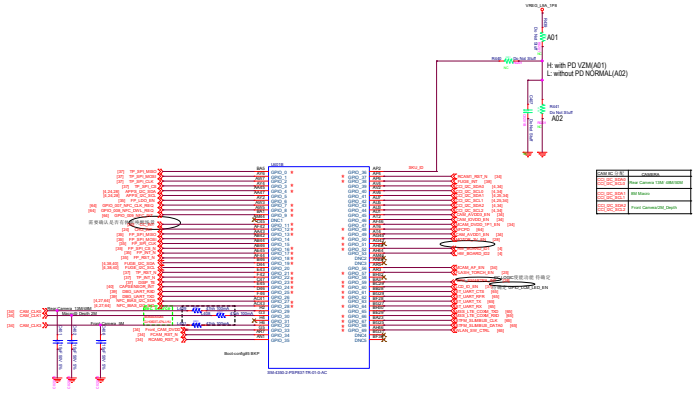
VREG_L5A_1P8
A01
H: with PD VZM(A01)
L: without PD NORMAL(A02)
A02
U0100
SM-E360-0-PSPE07-TR-01-0-AC
Back-configs0-BKP
Front Camera_5M
Main Camera 13M
Macro Camera 13M/2M

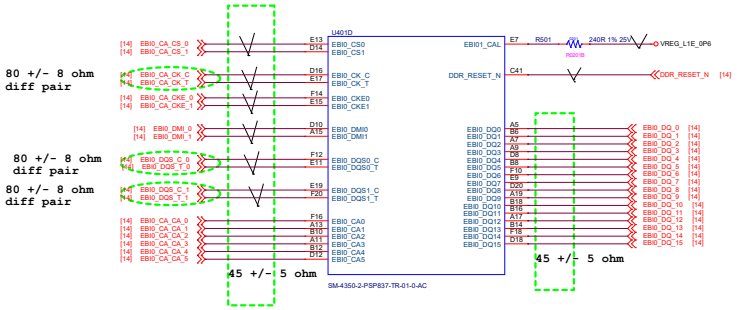

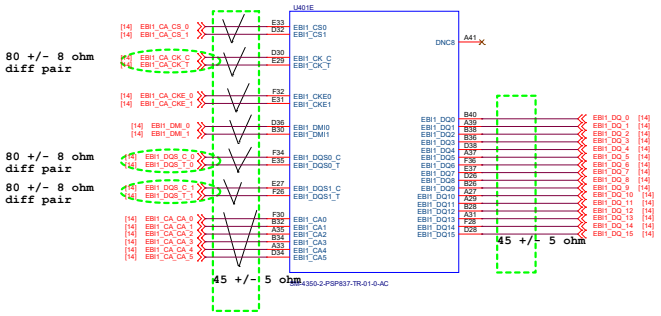

1103

Title	05.SM4350_AC LPDDR4X	REV: V0.1
DOCUMENT NO.:	PENANG_M331_MB PVT_C5-4 1228	Size C
DEPARTMENT: DEPARTMENT		DESIGNER: DESIGNER
龙旗科技 LONGCHEER		
Date: Monday, September 05, 2022		Sheet 5 of 66

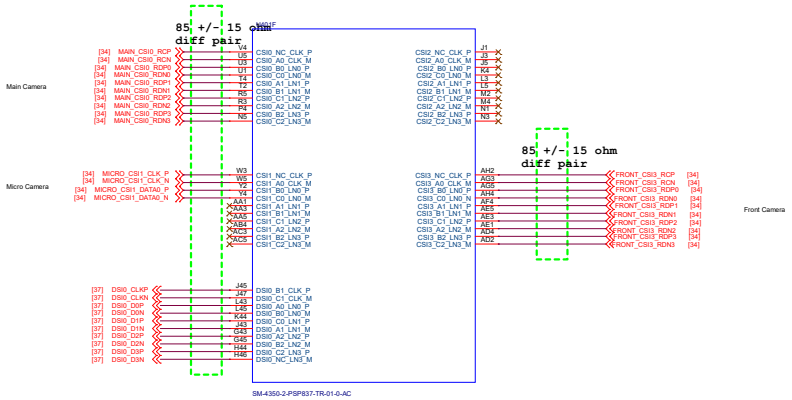

1103

Title	06.SM4350_AC CSI/DSI	REV: V0.1
DOCUMENT NO.:	PENANG_M331_MB PVT_C5-4 1228	Size C
DEPARTMENT: DEPARTMENT		DESIGNER: DESIGNER
龙旗科技 LONGCHEER		
Date: Monday, September 05, 2022		Sheet 6 of 66

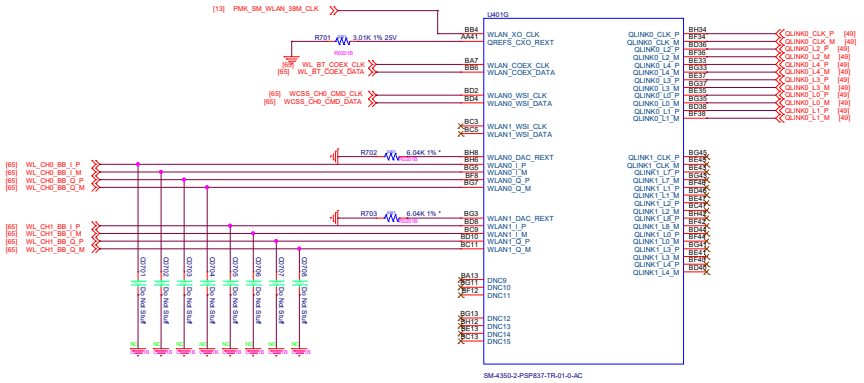

1103

Title	07.SM4350_AC WCSS/RF		REV: V0.1
DOCUMENT NO.:	PENANG_M331_MB PVT_C8-4 1220		Size C
DEPARTMENT:	DEPARTMENT	DESIGNER:	DESIGNER
龙旗科技 LONGCHEER			
Date:	Saturday, October 08, 2022	Sheet 7 of 66	

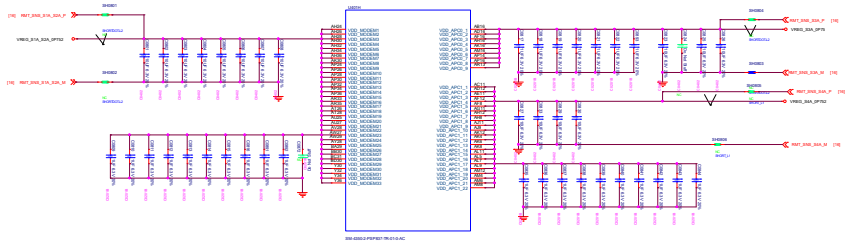

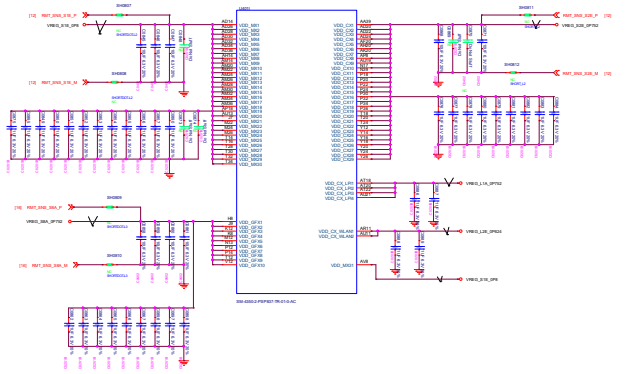

TITLE

Title	08.SM4350_AC PWR_1	REV. V8.T
DOCUMENT NO:	PEM8MS_8631_M8 PVT_C5.4 1359	Size D
DEPARTMENT:	DEPARTMENT	DESIGNER: DESIGNER
龍 騰 科 技 LONGCHEER		
Date: Saturday, October 08, 2022		Sheet 8 of 68

SM4350 Pro 与SM6375 区别:
PIN: AU17 ,R27,AD18
SM4350 接电源 VREG_S1E_0P8
SM6375 NC

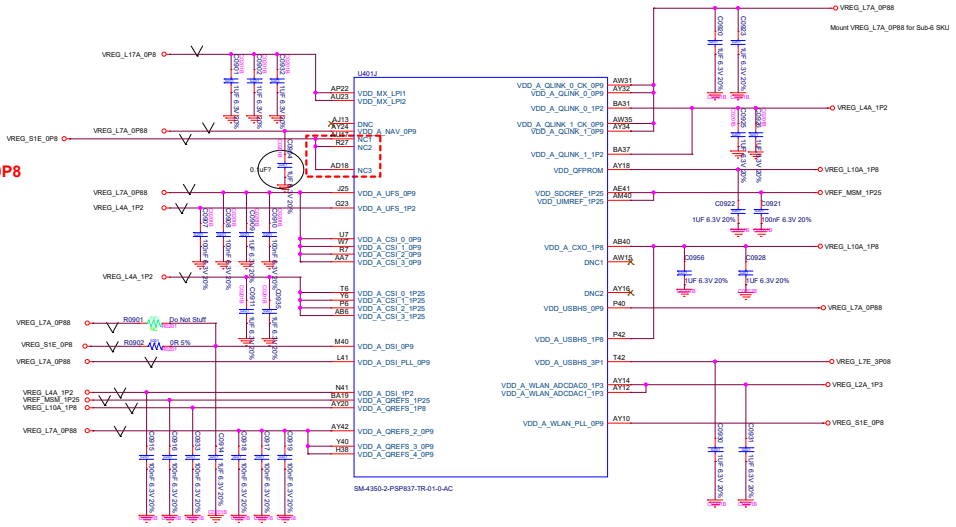

Note

From a PDN standpoint for VDD_A_EBI and VDD_IO_EBI, following is recommended to be done in the Layout.
1)Place the capacitors C231,C233,C233,C232,C270,C269 connected to VREG_S1E_0P8 close to SM6375 Pins J21, J17, J15, J33, J31, J29.
2)Place the capacitors C255,C254,C267,C265,C275,C272 connected to VREG_L1E_0P6 close to SM6375 pins K22, K20, K16, K14, H20, K36, K32, K30, K28, H30.
3)Ensure VDD_A_EBI pins are shorted together in any of the PCB layer L1-L4
4)Ensure VDD_IO_EBI pins are shorted together in any of the PCB layer L1-L4

1103

Title	09.SM4350_AC_PWR_2	REV: V0.1	
DOCUMENT NO.:	PENANG_M331_MB PVT_C5-4 1228	Size C	
DEPARTMENT:	DEPARTMENT	DESIGNER:	DESIGNER
龙旗科技 LONGCHEER			
Date: Saturday, October 08, 2022	Sheet 9 of 66		

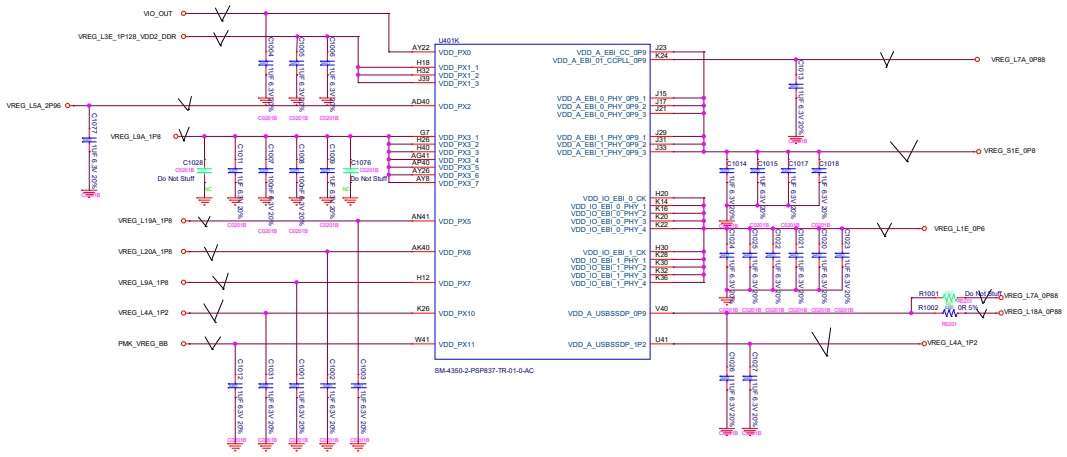
VIO_OUT
VREG_L3E_1P128_VDD2_DDR
VREG_L5A_2P96
VREG_L9A_1P8
VREG_L19A_1P8
VREG_L20A_1P8
VREG_L9A_1P8
VREG_L4A_1P2
PMK_VREG_BB
U401K
AY22 VDD_PX0
H18 VDD_PX1_1
H32 VDD_PX1_2
J39 VDD_PX1_3
AD40 VDD_PX2
G7 VDD_PX3_1
H26 VDD_PX3_2
H40 VDD_PX3_3
AG41 VDD_PX3_4
AP40 VDD_PX3_5
AY26 VDD_PX3_6
AY8 VDD_PX3_7
AN41 VDD_PX5
AK40 VDD_PX6
H12 VDD_PX7
K26 VDD_PX10
W41 VDD_PX11
VDD_A_EBI_CC_0P9 J23
VDD_A_EBI_01_CCPLL_0P9 K24
VDD_A_EBI_0_PHY_0P9_1 J15
VDD_A_EBI_0_PHY_0P9_2 J17
VDD_A_EBI_0_PHY_0P9_3 J21
VDD_A_EBI_1_PHY_0P9_1 J29
VDD_A_EBI_1_PHY_0P9_2 J31
VDD_A_EBI_1_PHY_0P9_3 J33
VDD_IO_EBI_0_CK H20
VDD_IO_EBI_0_PHY_1 K14
VDD_IO_EBI_0_PHY_2 K16
VDD_IO_EBI_0_PHY_3 K20
VDD_IO_EBI_0_PHY_4 K22
VDD_IO_EBI_1_CK H30
VDD_IO_EBI_1_PHY_1 K28
VDD_IO_EBI_1_PHY_2 K30
VDD_IO_EBI_1_PHY_3 K32
VDD_IO_EBI_1_PHY_4 K36
VDD_A_USBSSDP_0P9 V40
VDD_A_USBSSDP_1P2 U41
SM-4350-2-PSP837-TR-01-0-AC
C1028 Do Not Stuff
C1076 Do Not Stuff
C1007 1uF 6.3V 20%
C1008 1uF 6.3V 20%
C1009 1uF 6.3V 20%
C1010 1uF 6.3V 20%
C1011 1uF 6.3V 20%
C1012 1uF 6.3V 20%
C1013 1uF 6.3V 20%
C1014 1uF 6.3V 20%
C1015 1uF 6.3V 20%
C1017 1uF 6.3V 20%
C1018 1uF 6.3V 20%
C1021 1uF 6.3V 20%
C1022 1uF 6.3V 20%
C1023 1uF 6.3V 20%
C1024 1uF 6.3V 20%
C1025 1uF 6.3V 20%
C1026 1uF 6.3V 20%
C1027 1uF 6.3V 20%
C1100 1uF 6.3V 20%
C1101 1uF 6.3V 20%
C1102 1uF 6.3V 20%
C1103 1uF 6.3V 20%
C1104 1uF 6.3V 20%
C1105 1uF 6.3V 20%
C1106 1uF 6.3V 20%
C1107 1uF 6.3V 20%
C1108 1uF 6.3V 20%
C1109 1uF 6.3V 20%

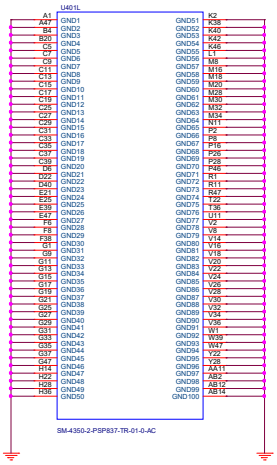

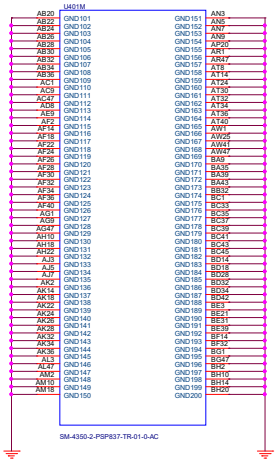

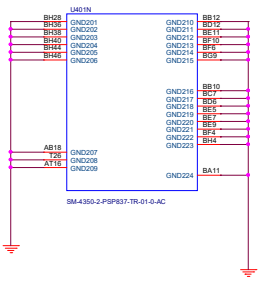

1103

Title	11.SM4350_AC GROUND	REV: V0.1
DOCUMENT NO.:	PENANG_M331_MB PVT_C5-4 1228	Size C
DEPARTMENT: DEPARTMENT		DESIGNER: DESIGNER
龙旗科技 LONGCHEER		
Date: Monday, September 05, 2022		Sheet 11 of 66

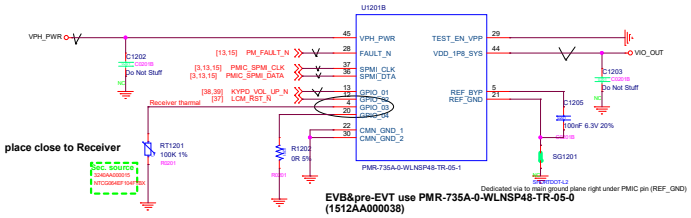

EVB&pre-EVT use PMR-735A-0-WLNSP48-TR-05-0 (1512AA000038)

EVT&DVT1&DVT2&PVT use PMR-735A-0-WLNSP48-TR-05-1 (1113AL000118&1113AA000137)

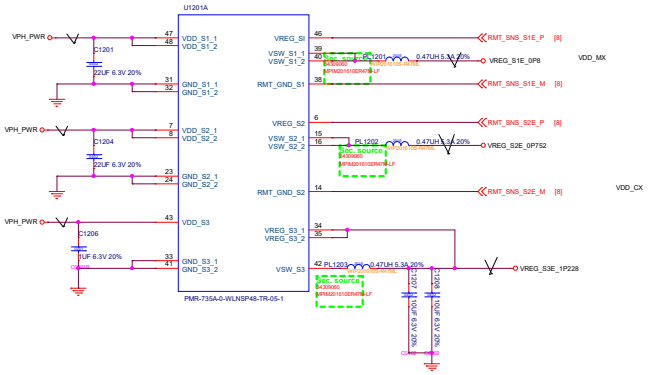

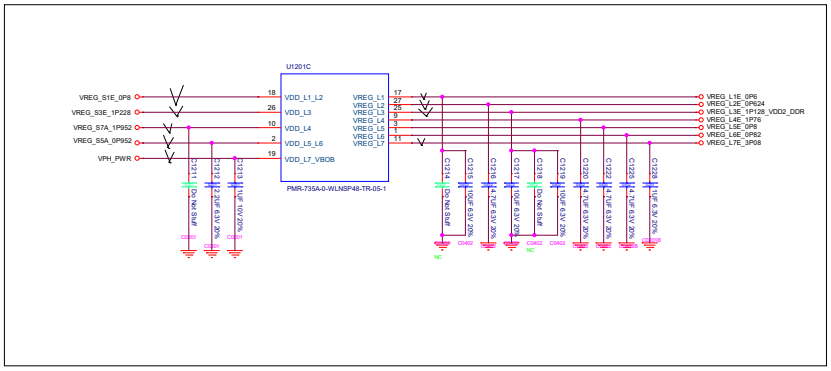

1103

Title	12.PMR735A	REV: V0.1
DOCUMENT NO.:	PENANG_M331_MB PVT_C5-4 1226	Size C
DEPARTMENT: DEPARTMENT		DESIGNER: DESIGNER
龙旗科技 LONGCHEER		
Date: Saturday, October 08, 2022	Sheet 12 of 66	

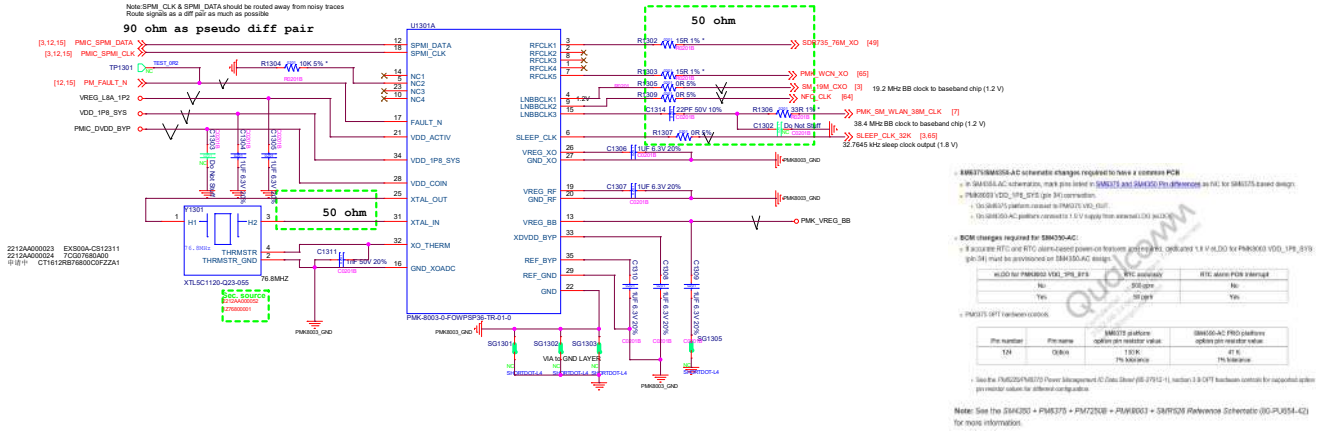

- EM6375/SM6350-AC schematic changes required to have a common PCB
  - In SM6350-AC schematics, mark pins listed in SM6375 and SM4350 Pin differences as NC for SM6375-based design.
  - PMK8003 VDD_SP8_SYS (pin 34) connection:
    - On SM6375 platform, connect to PMG75 VIO_OUT.
    - On SM6350-AC platform connect to 1.8 V supply from external LDO (eLDO).
- BOM changes required for SM4350-AC:
  - If accurate RTC and RTC alarm-based power-on features are required, dedicated 1.8 V eLDO for PMK8003 VDD_1P8_SYS (pin 34) must be provisioned on SM4350-AC design.

eLDO for PMK8003 VDD_1P8_SYS	RTC accuracy	RTC alarm PON interrupt
No	500 ppm	No
Yes	50 ppm	Yes

- PM6375 OPT hardware controls:

Pin number	Pin name	EM6375 platform option pin resistor value	SM4350-AC PRO platform option pin resistor value
124	Option	130K 1% tolerance	47 K 1% tolerance

- See the PM6250/PM6370 Power Management IC Data Sheet (80-P7912-1), section 3.9 OPT hardware controls for supported option pin resistor values for different configuration.

Note: See the SM4250 + PM6375 + PM7250B + PMK8003 + SMR526 Reference Schematic (80-PL654-42) for more information.

Qualcomm

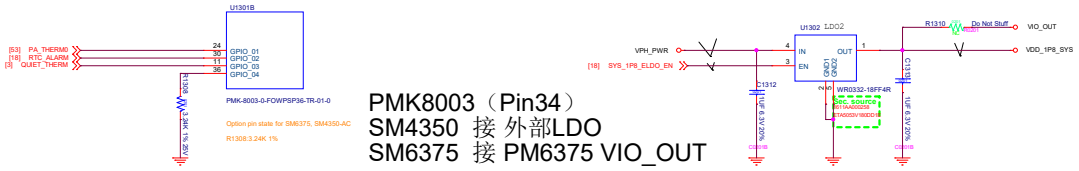

PMK8003（Pin34）
SM4350 接 外部LDO
SM6375 接 PM6375 VIO_OUT

Option pin state for SM7225, SM6350, and SM4350

Boot Options	Resistor value (Ω) 1% accuracy	Preferred Resistor Value
No SD_Card BOOT	52.3kΩ	50kΩ–54kΩ
SD_Card BOOT	88.7kΩ	85kΩ–93kΩ

Option pin state for SM6375, SM4350-AC

PMK8003 Pin name	Resistor value (Ω) 1% accuracy
GPIO_4	3240

eLDO for PMK8003 VDD_1P8_SYS	RTC accuracy	RTC alarm PON interrupt
No	500ppm	No
Yes	50ppm	Yes

1103

Title	13.PMK8003_CLK	REV: V0.1
DOCUMENT NO.:	PENANG_M331_MB PVT_C5-4 1228	Size C
DEPARTMENT:	DEPARTMENT	DESIGNER: DESIGNER
龙旗科技 LONGCHEER		
Date: Monday, December 19, 2022	Sheet 13 of 66	

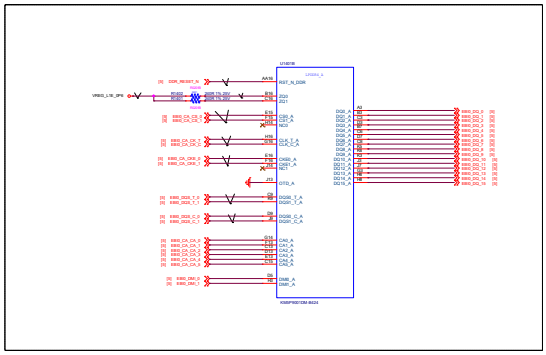

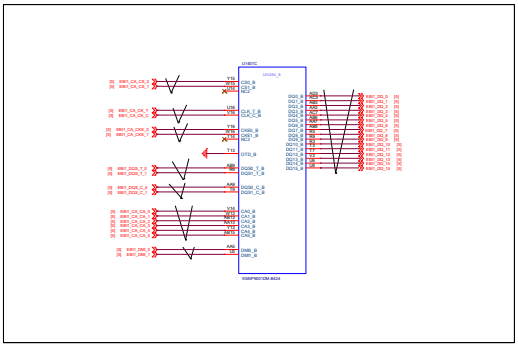

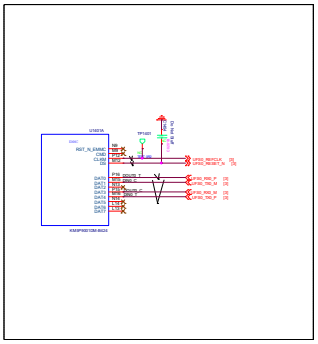

4G+64G	KM5P9001DM-B424	1415AA000079	1415AL000040	1st.
	MT29VZZZAD81SFSL-046 W.22C	Applying	1412AL000151	2nd.
	H9QG9G5AN6X154	1415AA000082	1415AL000042	3th.
4G+128G	KM5L9001DM-B424	1415AA000080	1415AL000041	1st.
	MT29VZZZCD91SFSM-046 W.18C	1415AA000081	1415AL000046	2nd.

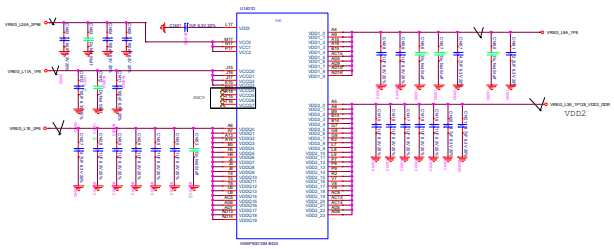

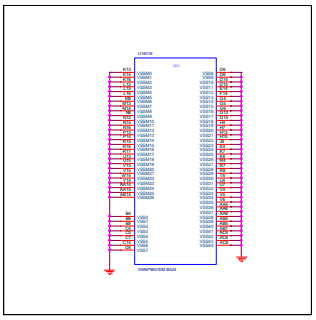

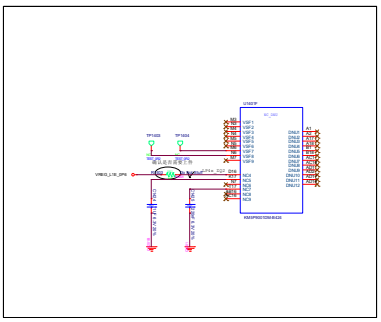

TITLE:	14.MEMORY_UMCP		
DOCUMENT NO:	PEM865_8631_M8 PVT_2.0-4 1320	REV:	D
DEPARTMENT:	DEPARTMENT	DESIGNER:	DESIGNER
巨騰科技 LONGCHEER			
DATE:	Saturday, October 08, 2022	Sheet 14 of 68	

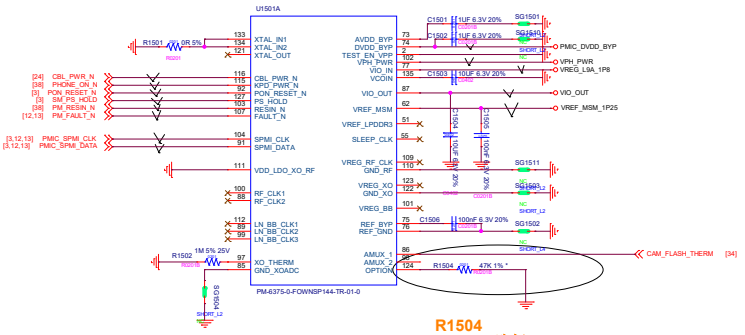

R1504
SM6375选择130K 1%,
SM4350 PRO选择47K 1%

1103

Title	15.PM6375_CONTROL	REV: V0.1
DOCUMENT NO.:	PENANG_M331_MB PVT_C5-4 1228	Size C
DEPARTMENT:	DEPARTMENT	DESIGNER: DESIGNER
龙旗科技 LONGCHEER		
Date: Saturday, October 08, 2022	Sheet 15 of 66	

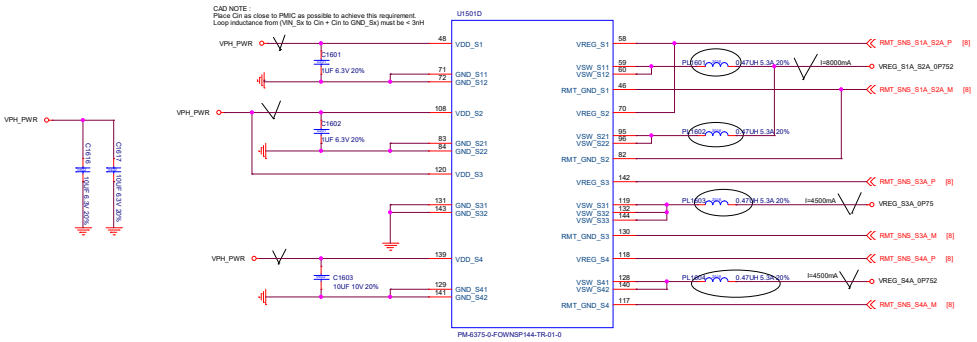

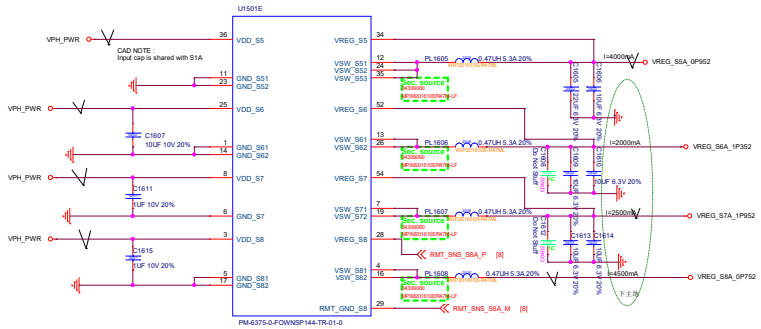

1103

Title	16.PM6375_BUCKS	REV: V0.1	
DOCUMENT NO.:	PENANG_M331_MB PVT_C5-4 1228	Size C	
DEPARTMENT:	DEPARTMENT	DESIGNER: DESIGNER	
龙旗科技 LONGCHEER			
Date: Saturday, October 08, 2022	Sheet 16 of 66		

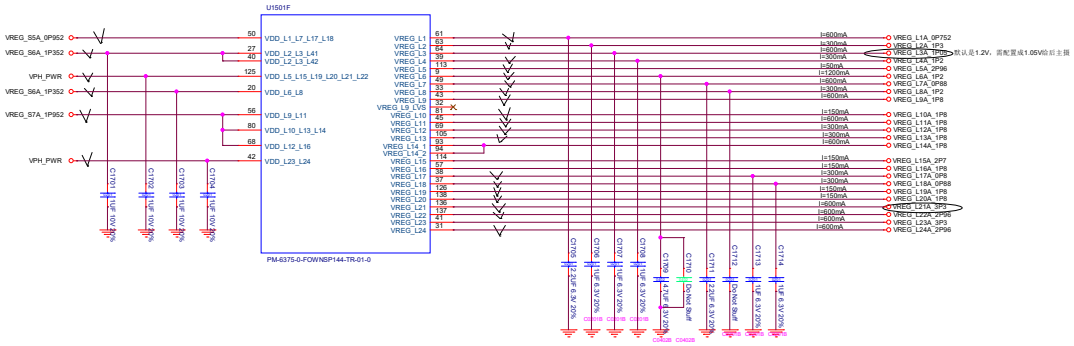

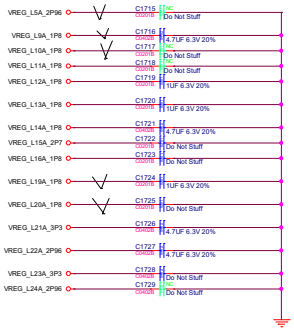

1103

Title	17.PM6375_LDOS	REV: V0.1
DOCUMENT NO.:	PENANG_M331_MB PVT_C5-4 1228	Size C
DEPARTMENT: DEPARTMENT		DESIGNER: DESIGNER
龙旗科技 LONGCHEER		
Date: Monday, December 19, 2022		Sheet 17 of 66

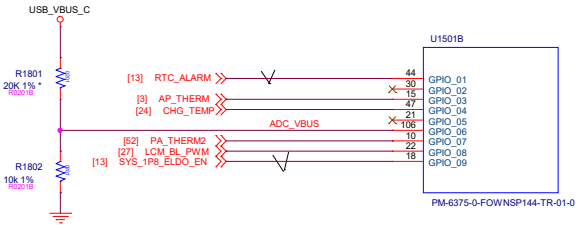

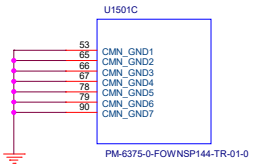

1103

Title	18.PM6375_GPIOS_GND		REV: V0.1
DOCUMENT NO.:	PENANG_M331_MB PVT_C5-4 1220		Size B
DEPARTMENT:	DEPARTMENT	DESIGNER:	DESIGNER
龙旗科技 LONGCHEER			
Date:	Monday, September 05, 2022	Sheet 18 of 66	

15W Charger

U2401				
	Manufacture 1 P/N	Manufacture	I2C ADDRESS	Date
1st	SGM41542YTQF4G/TR	SGM	0x6B	080406
2nd	TBD	TBD	TBD	
3rd	TBD	TBD	TBD	

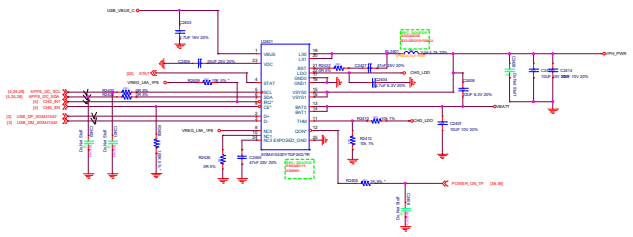

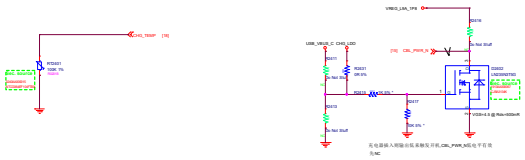

CC logic

U2402				
	Manufacture 1 P/N	Manufacture	I2C ADDRESS	Date
1st	SGM7220XUQ72G/TR	SGM	0x67	080406
2nd	TBD	TBD	TBD	
3rd	TBD	TBD	TBD	

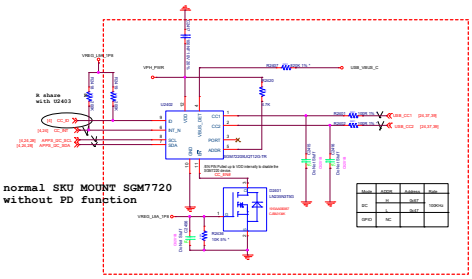

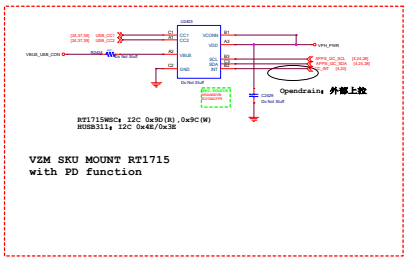

TITLE:	24.Charger		REV: V01
DOCUMENT NO:	PEMAIN_8031_MB PVT_C0-1 1200		SIZE: D
DEPARTMENT:	DEPARTMENT	DESIGNER:	DESIGNER
龙旗科技 LONGCHEER			
DATE:	Monday, November 07, 2022	Sheet 24 of 68	

Flash LED Driver&LED

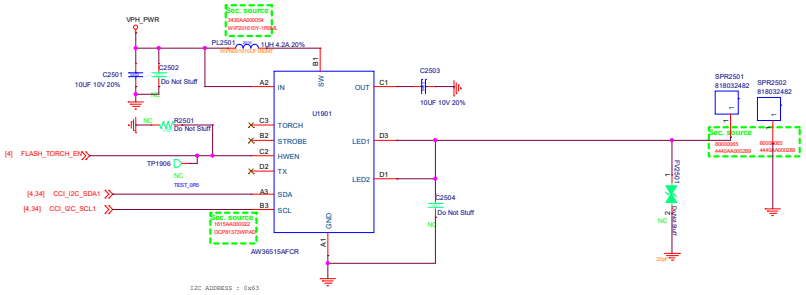

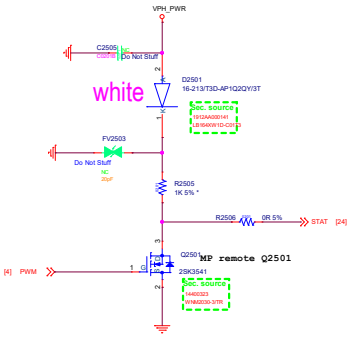

Charger indicator

1103

Title	25.Flash LED	REV: V0.1
DOCUMENT NO.:	PENANG_M331_MB PVT_C5-4 1228	Size C
DEPARTMENT: DEPARTMENT		DESIGNER: DESIGNER
龙旗科技 LONGCHEER		
Date: Monday, December 19, 2022		Sheet 25 of 66

LCM Backlight Driver

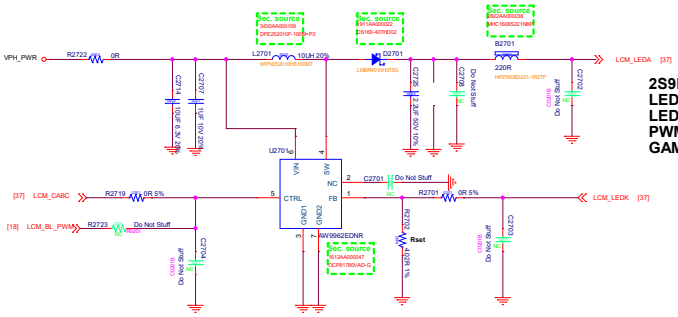

2S9P
LED:20mA/Vf=2.9V, 3.1V max
LEDA: 26.1~27.9V
PWM: 20KHz/11Bit
GAMMA:2.2+/-0.3

Iled=200mV/Rset
Iset=49.7mA

LCM BIAS

U2702				
	Manufacture 1 P/N	Manufacture	I2C ADDRESS	Rate
1st	OCP2131WPAD-G	OCS	0x3E	400KHz
2nd	TBD	TBD	TBD	
3rd	TBD	TBD	TBD	

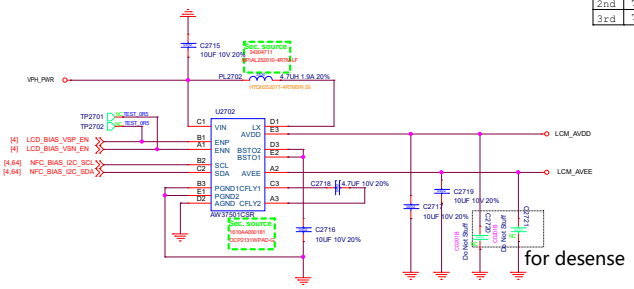

I2C Address 0X3E

1103

Title	27.BL_LCM_BIAS		REV: V0.1
DOCUMENT NO.:	PENANG_M331_MB PVT_C5-4 1228		Size C
DEPARTMENT:	DEPARTMENT	DESIGNER:	DESIGNER
龙旗科技 LONGCHEER			
Date:	Wednesday, November 02, 2022	Sheet 27 of 66	

PA FOR REC

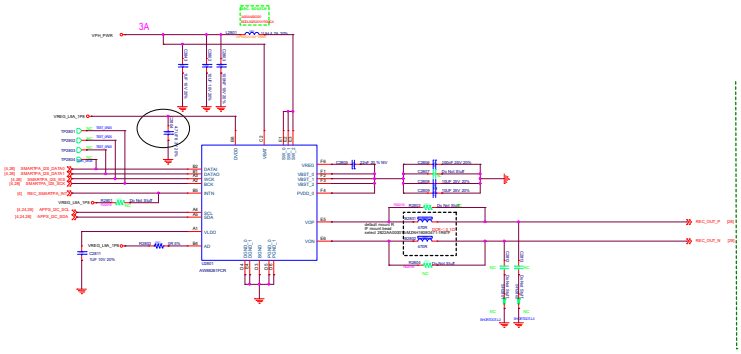

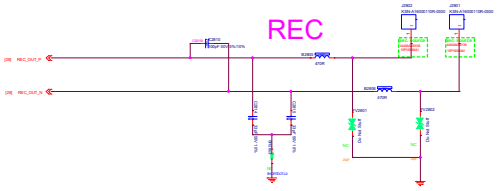

PA FOR SPK

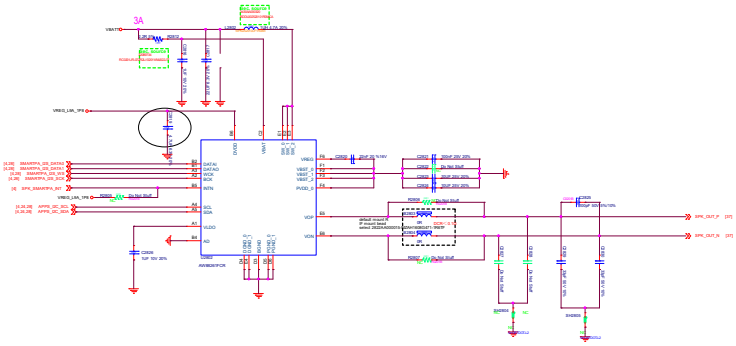

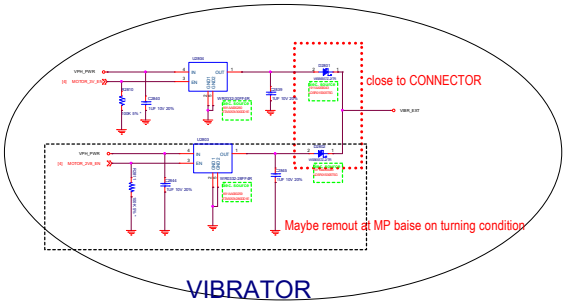

TITLE:	28.Audio_PA_REC&Vibrator	REV:	V0.1
DOCUMENT NO:	PEM0M0_8031_M0 PVT_2.0-1 1000	Size:	D
DEPARTMENT:	DEPARTMENT	DESIGNER:	DESIGNER
龙旗科技 LONGCHEER			
DATE:	Wednesday, November 16, 2022	Sheet	28 of 68

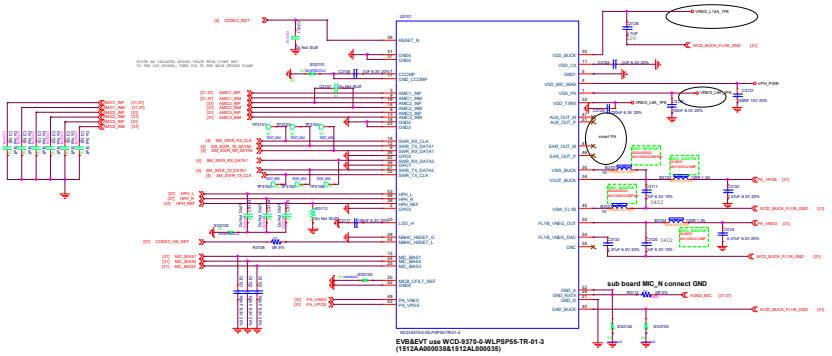

靠近BTB

靠近CODEC

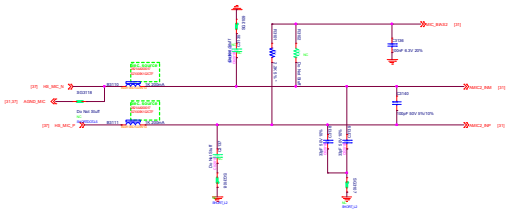

MIC2

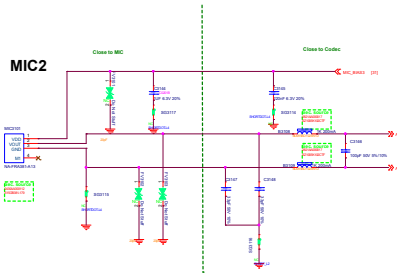

TITLE:	31.CODEC_WCD9370	REV: V6.1	
DOCUMENT NO:	PEMMIS_8931_005 PVT_C0-1 1309	Size: D	
DEPARTMENT:	DEPARTMENT	DESIGNER:	DESIGNER
龙慧科技 LONGCHEER			
DATE: Monday, October 31, 2022		Sheet 31 of 68	

Rear Camera 16M/50M

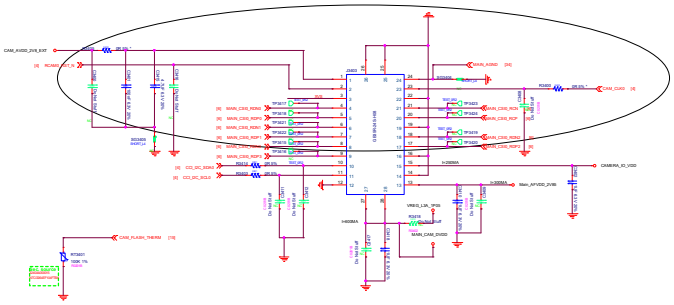

后摄 LDO AVDD 2.8V

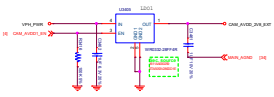

后摄 LDO DVDD 1.1V

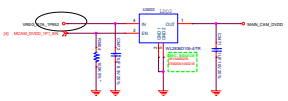

后摄 LDO AFVDD 2.8V

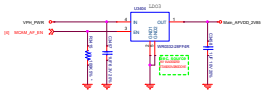

LDO CAM IOVDD 1.8V

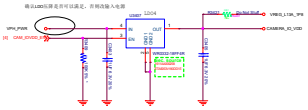

Front Camera

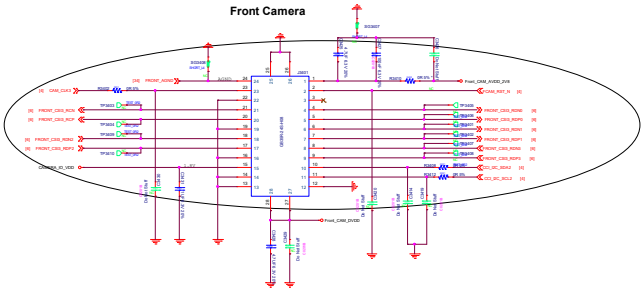

2M Macro

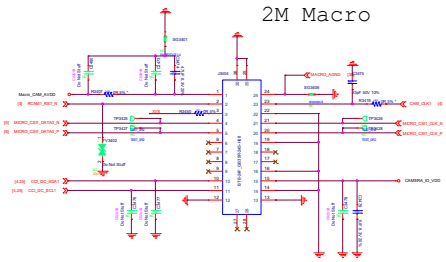

Macro LDO AVDD 2.8V

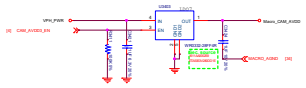

前摄&Macro LDO AVDD 2.8V

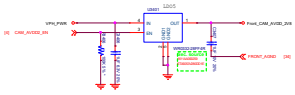

前摄 LDO DVDD 1.2V

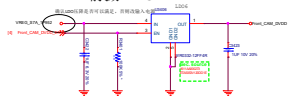

电源	后主摄	后前摄	前摄
AVDD2(8V)	LD01	LD05 LD07有部	LD05
DVDD(1.1)	VREG_L1A_1P35 LD02有部		
DVDD(1.2)			LD06
AFVDD(2.8V)	LD03		
DOVDD(1.8V)	VREG_L13A_1P8 LD04有部	VREG_L13A_1P8 LD04有部	VREG_L13A_1P8 LD04有部

信号	后主摄	后前摄	前摄
RC	RC0	RC1	RC2
MCLK	MCLK0	MCLK1	MCLK3
MPI	CSI0	CSI1	CSI3

Title	34.CAMERA	REV. V0.1	
DOCUMENT NO:	PENANG_8031_MB PVT_Z5-4 1320	Size	Custom
DEPARTMENT:	DEPARTMENT	DESIGNER:	DESIGNER:
龙旗科技 LONGCHEER			
DATE:	Monday, December 19, 2022	Sheet	34 of 88

U2501				
	Manufacture 1 P/N	Manufacture	I2C ADDRESS	Rate
1st	ICM-42607-P	TDK	0x68	400KHz
2nd	LSM6DSOETR3	ST	TBD	
3rd	TBD	TBD	TBD	

G + Gyro

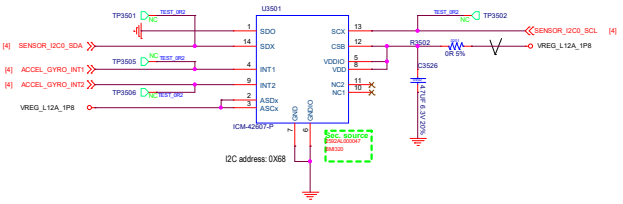

E_COMPASS

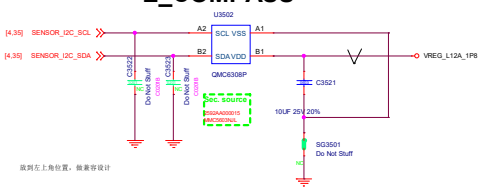

Barometer

BMP380/ ICP10730/BMP390 pin-to-pin

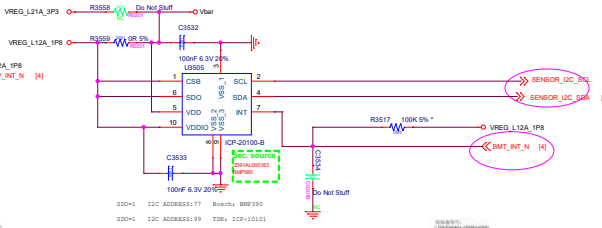

PL SENSOR

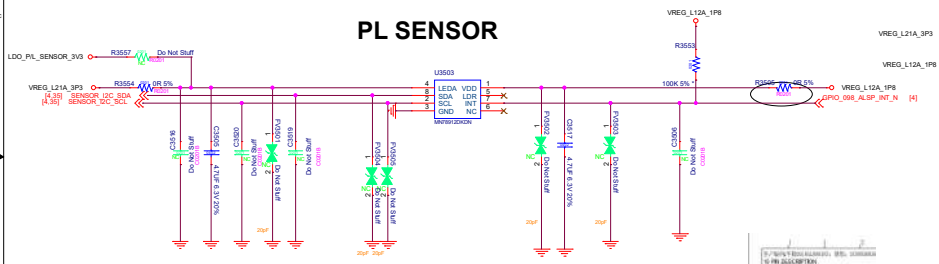

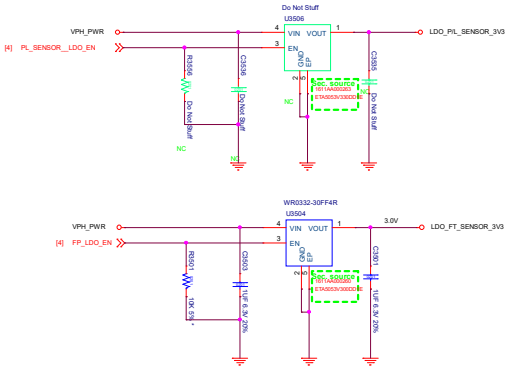

FP

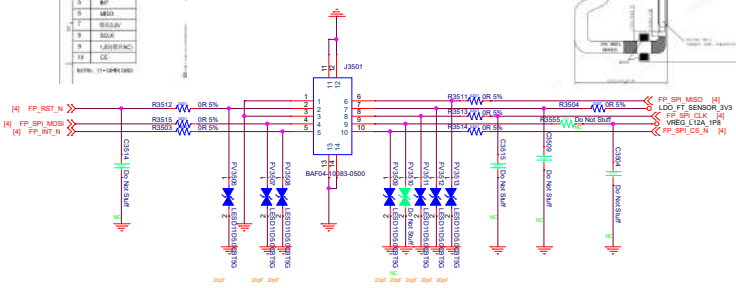

Title	35.SENSOR		REV: V0.1
DOCUMENT NO.:	PENANG_M331_MB PVT_C5-4 1228		Size C
DEPARTMENT:	DEPARTMENT	DESIGNER:	DESIGNER
龙旗科技 LONGCHEER			
Date:	Saturday, October 08, 2022	Sheet	35 of 66

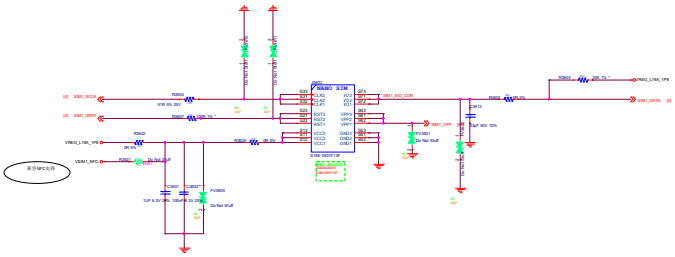
NANO SIM
SIM1_SCLK
SIM1_SRST
SIM1_SIO
SIM1_VPP
SIM1_DATA
VREG_L19A_1P8
VREG_L17A_2P9
VSIM1_NFC
R2802
R2803
R2804
R2805
R2806
R2807
R2808
R2809
R2810
R2811
R2812
R2813
R2814
R2815
R2816
R2817
R2818
R2819
R2820
R2821
R2822
R2823
R2824
R2825
R2826
R2827
R2828
R2829
R2830
R2831
R2832
R2833
R2834
R2835
R2836
R2837
R2838
R2839
R2840
R2841

Sub Connector

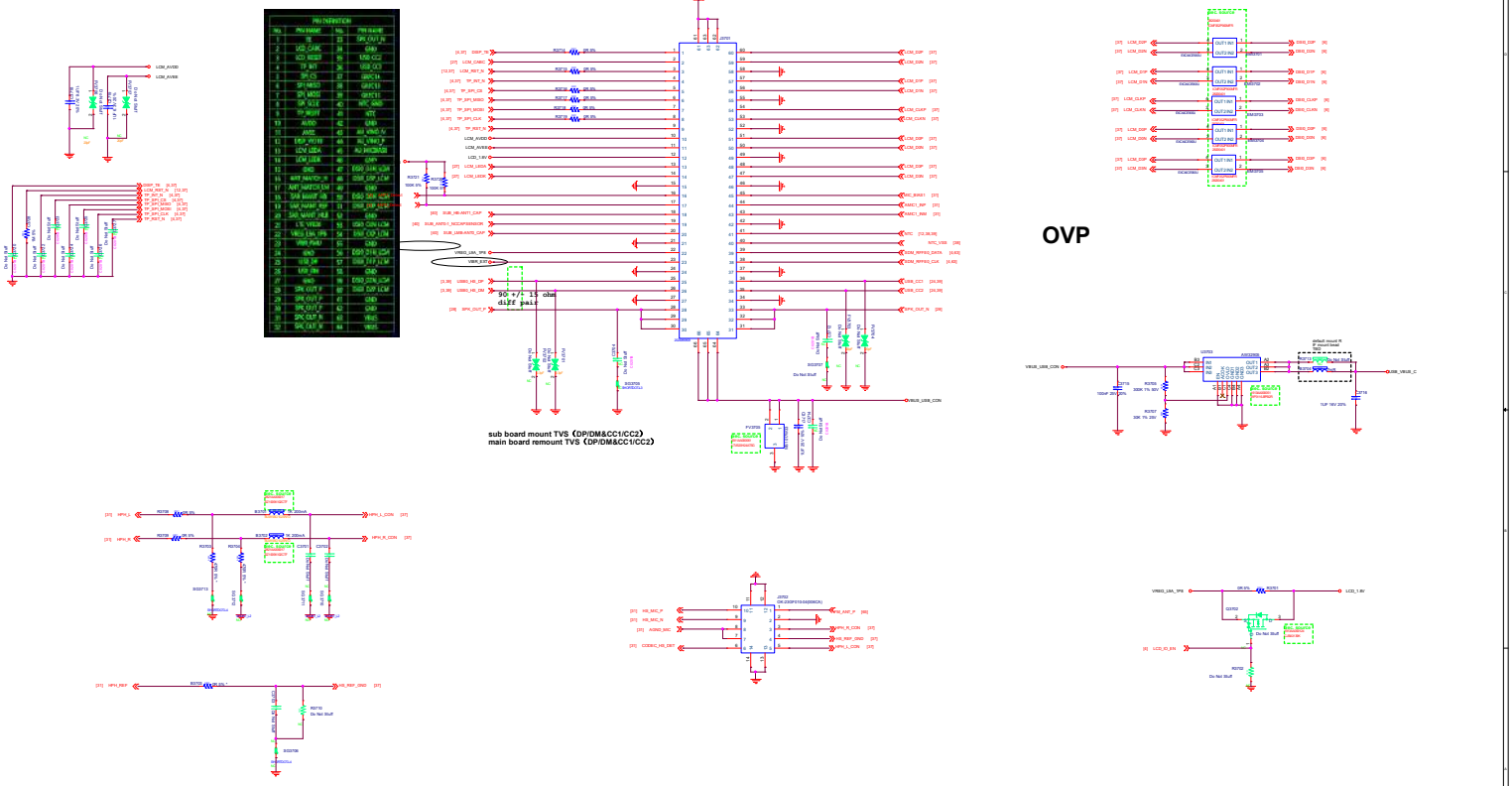

Title	37.SUB_CONN
DOCUMENT NO:	PEMMIS_8931_MB PVT_2.0-1.1000
REV:	D
DEPARTMENT:	DEPARTMENT
DESIGNER:	DESIGNER
Date:	Thursday, December 08, 2022
Sheet	37 of 68

优先级	料号	型号
1		SM5602
2		CW2217

BATTERY

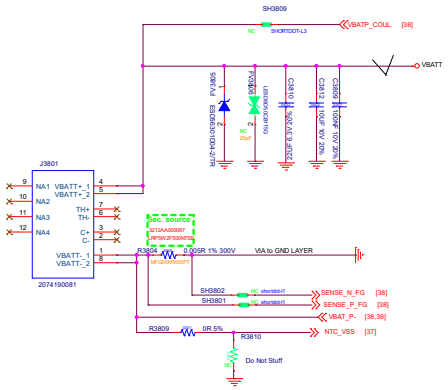

Fuel_Gauge

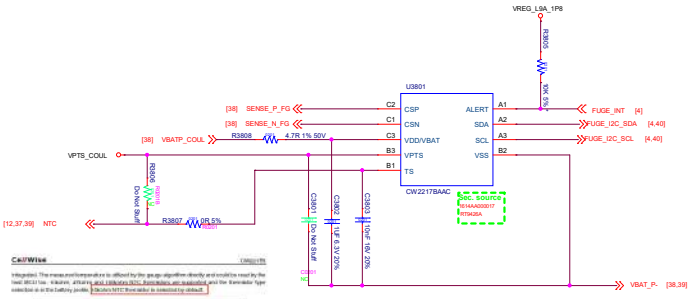

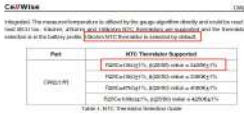

1st CW2217B
R3806=NC C3801=NC
2ed RT9426A

SIDEKEY

VOL+

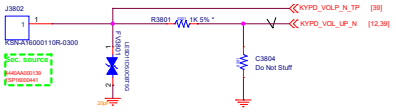

VOL-

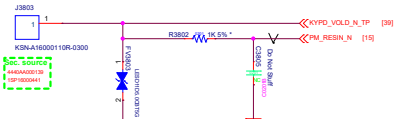

Power key

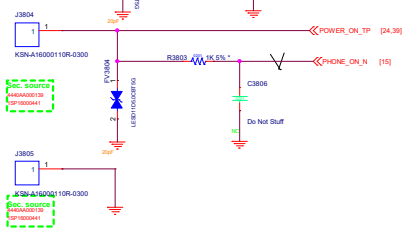

1103

Title	38.VBAT_CONN	REV: V0.1
DOCUMENT NO.:	PENANG_M331_MB PVT_C5-4 1226	Size C
DEPARTMENT: DEPARTMENT		DESIGNER: DESIGNER
龙旗科技 LONGCHEER		
Date: Thursday, December 08, 2022	Sheet 38 of 66	

KEY

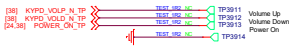

USB

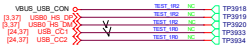

UART

VBAT

USB_BOOT

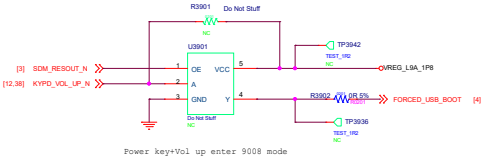

Power key+Vol up enter 9008 mode

INPUT		OUTPUT
OE	A	Y
L	H	L
L	L	H
H	X	Z

SHIELDING

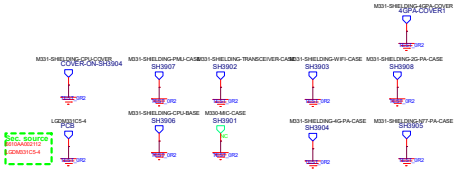

Marks point

TOP 面接地弹片

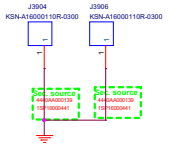

BOTTOM 面接地弹片

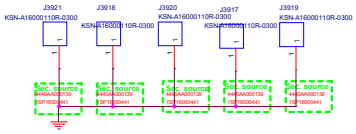

JTAG

螺丝垫片

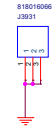

1103

Title	39.TEST POINT	REV: V0.1
DOCUMENT NO.:	PENANG_M331_MB PVT_C5-4 1226	Size C
DEPARTMENT: DEPARTMENT		DESIGNER: DESIGNER
龙旗科技 LONGCHEER		
Date: Monday, December 19, 2022		Sheet 39 of 66

SAR sensor

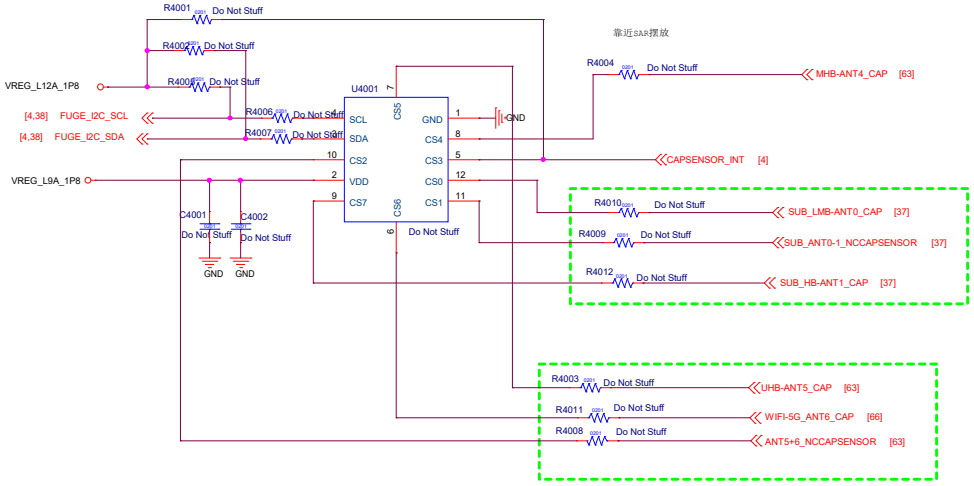

1103

Title	40 - SAR	REV: V0.1
DOCUMENT NO.:	PENANG_M331_MB PVT_C5-4 1220	Size B
DEPARTMENT: DEPARTMENT	DESIGNER: DESIGNER	
龙旗科技 LONGCHEER		
Date: Saturday, October 08, 2022	Sheet 40 of 66	

SDR735 GND

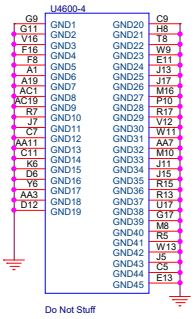

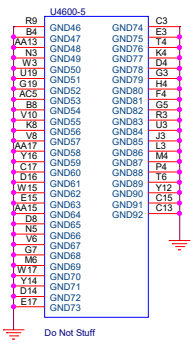

1103

Title	46 - SDR735_GND	REV: V0.1
DOCUMENT NO.:	PENANG_M331_MB PVT_C5-4 1220	Size B
DEPARTMENT: DEPARTMENT	DESIGNER: DESIGNER	
龙旗科技 LONGCHEER		
Date: Saturday, October 08, 2022	Sheet 46 of 66	

SDR735 POWER

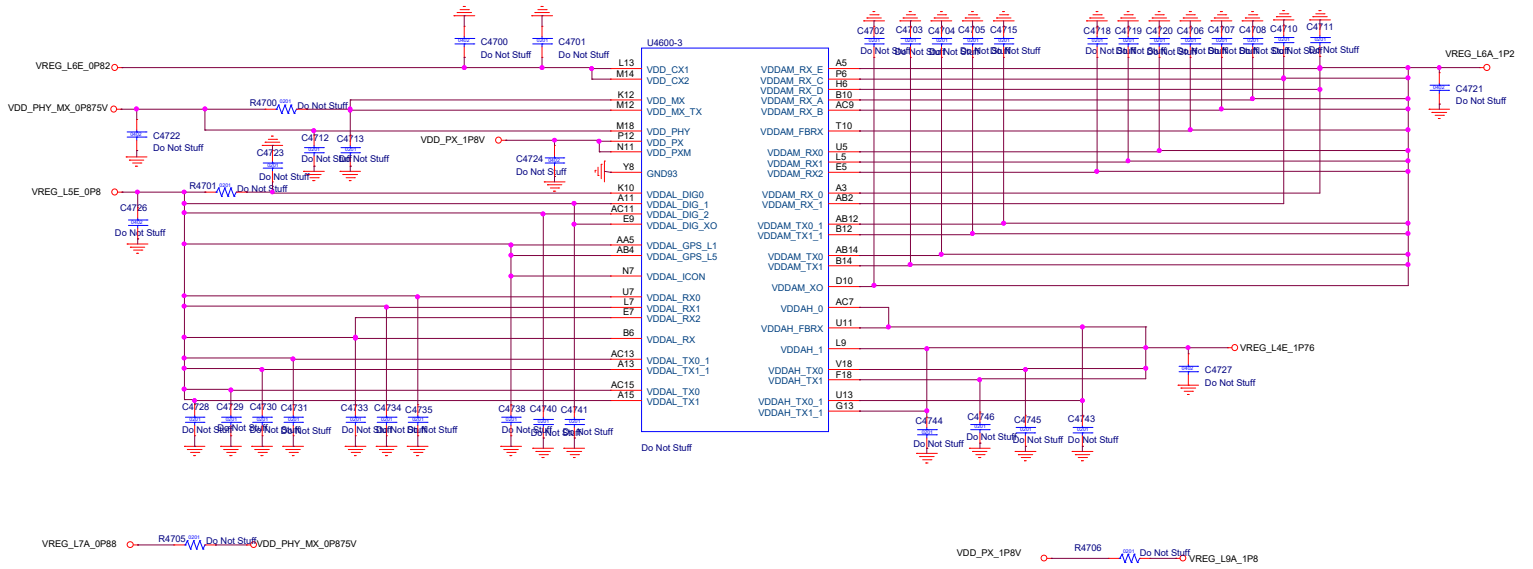

1103

Title	47 - SDR735_PWR	REV: V0.1
DOCUMENT NO.:	PENANG_M331_MB PVT_C5-4 1220	Size B
DEPARTMENT: DEPARTMENT	DESIGNER: DESIGNER	
龙旗科技 LONGCHEER		
Date: Saturday, October 08, 2022	Sheet 47 of 66	

SDR735 RXTX

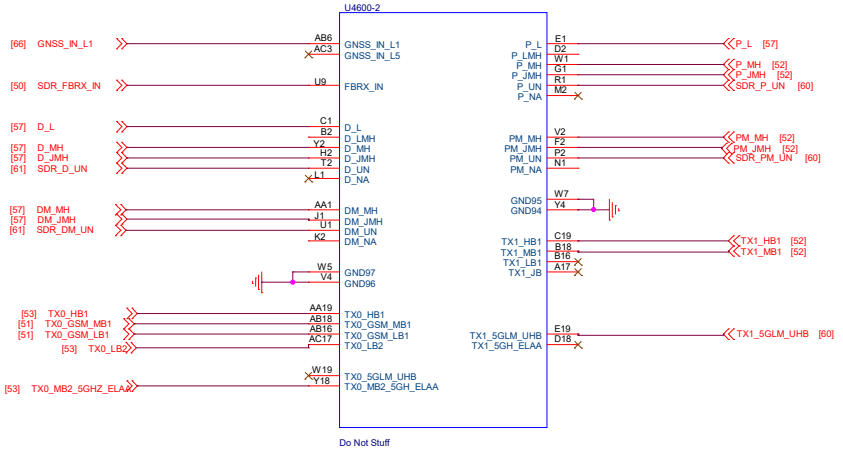

1103

Title	48 - SDR735_TX_RX	REV: V0.1
DOCUMENT NO.:	PENANG_M331_MB PVT_C5-4 1220	Size B
DEPARTMENT: DEPARTMENT	DESIGNER: DESIGNER	
龙旗科技 LONGCHEER		
Date: Saturday, October 08, 2022	Sheet 48 of 66	

SDR735 WMSS

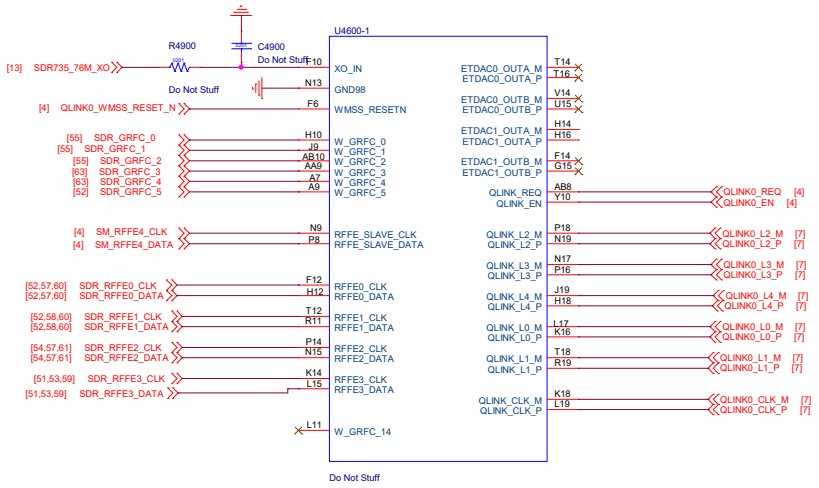

1103

Title	49 - SDR735_WMSS	REV: V0.1
DOCUMENT NO.:	PENANG_M331_MB PVT_C5-4 1220	Size B
DEPARTMENT: DEPARTMENT	DESIGNER: DESIGNER	
龙旗科技 LONGCHEER		
Date: Saturday, October 08, 2022	Sheet 49 of 66	

FBRX SWITCH

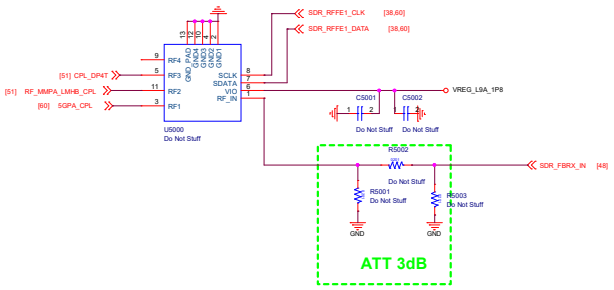

1103

Title	50 - FBRX	REV: V0.1
DOCUMENT NO.:	PENANG_M331_MB PVT_C5-4 1228	Size C
DEPARTMENT: DEPARTMENT		DESIGNER: DESIGNER
龙旗科技 LONGCHEER		
Date: Saturday, October 08, 2022		Sheet 50 of 66

2G_PA

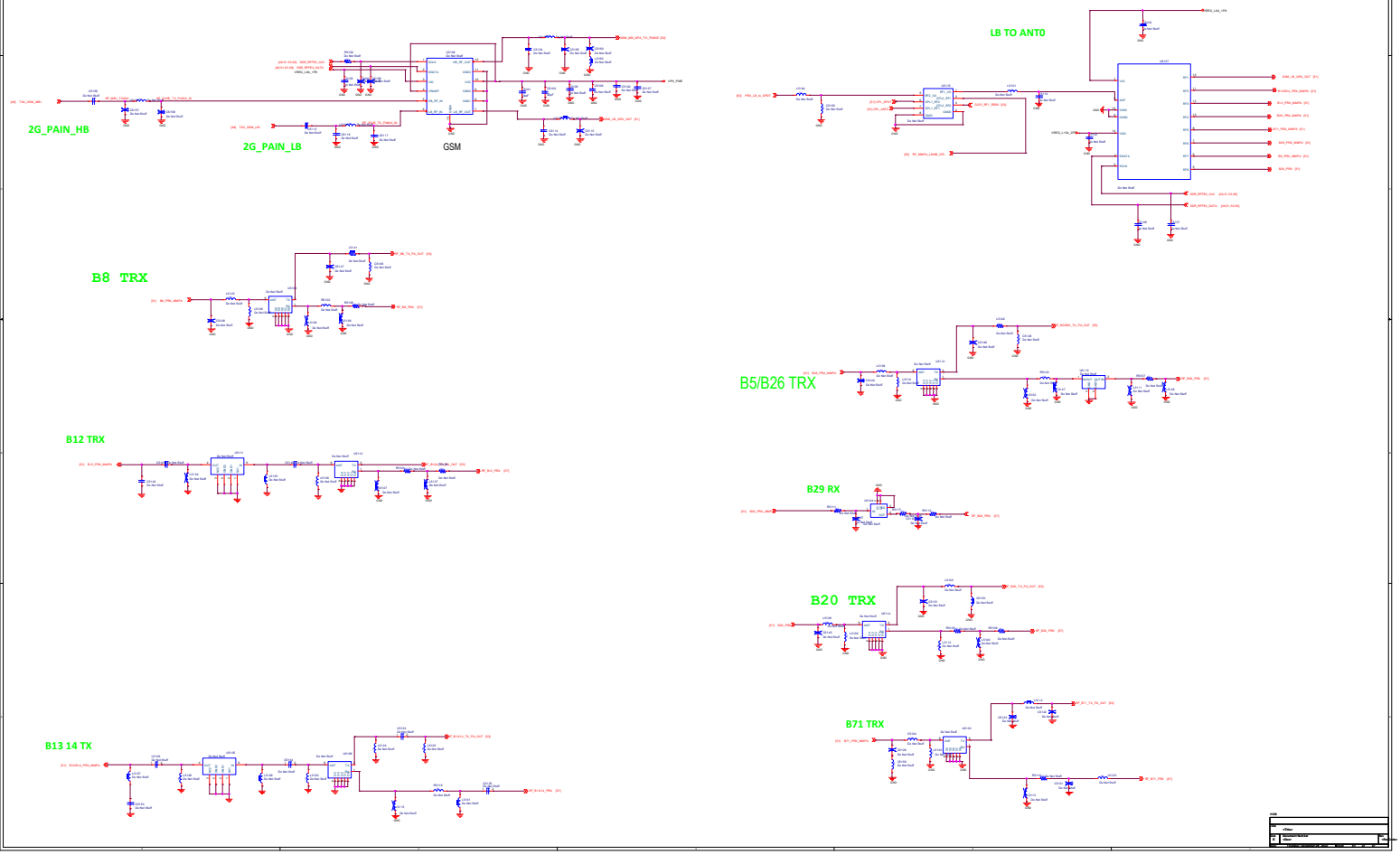
2G_PAIN_HB
2G_PAIN_LB
GSM
LB TO ANT0
B8 TRX
B5/B26 TRX
B12 TRX
B29 RX
B20 TRX
B13 14 TX
B71 TRX

MHB_QM77048B

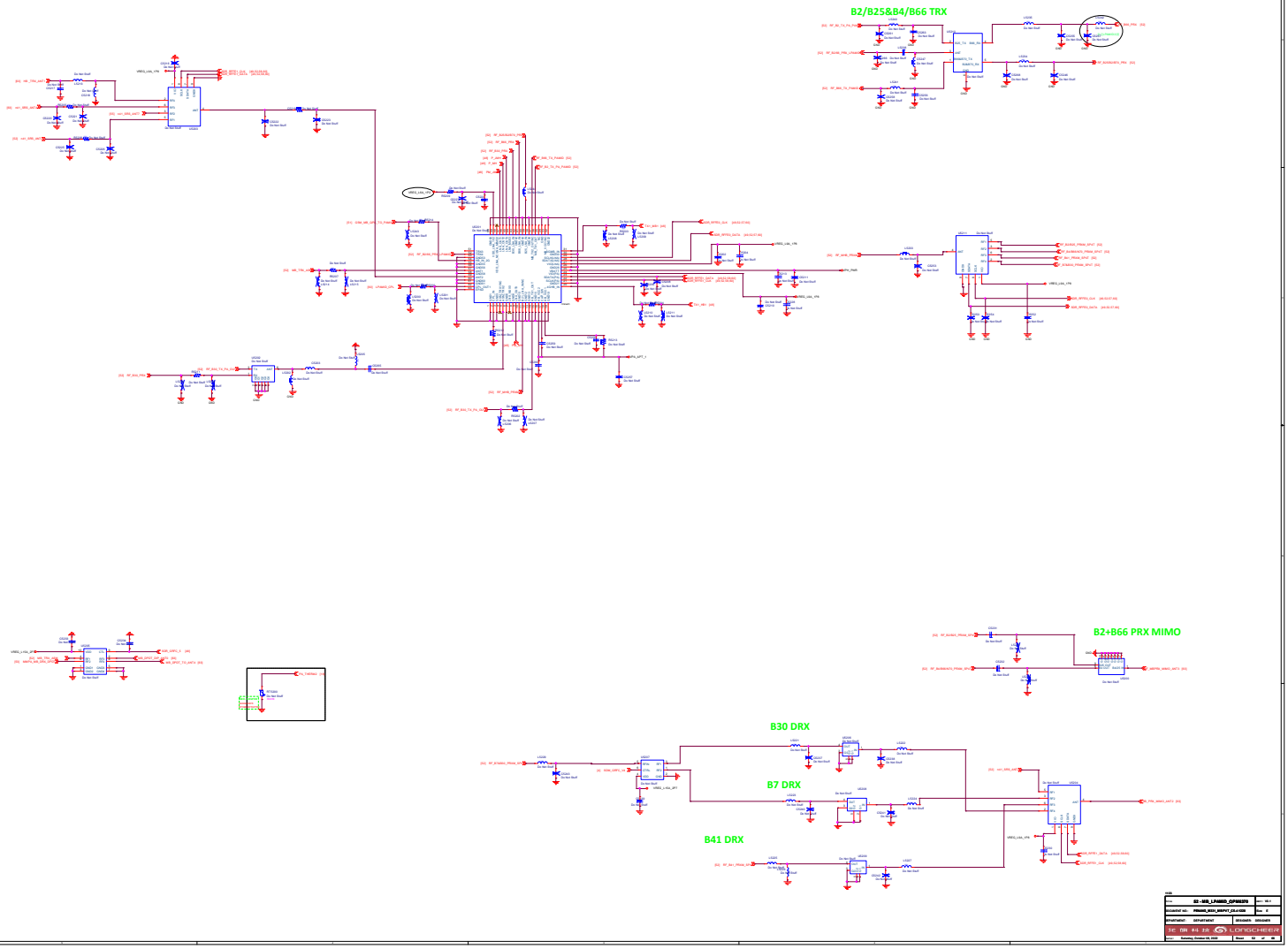

HHB			
Title	B2 - MB_LPAMIDD_CQPM8370		Rev. MB-F
Document No.	PR0A06_W24_MB4F47_2A.4.1000		Rev. 0
Date/Time	2021-07-21 14:47	Size	A3 Landscape
Sheet	Subsheet: Connect MB_2G3G	Sheet 03 of 08	

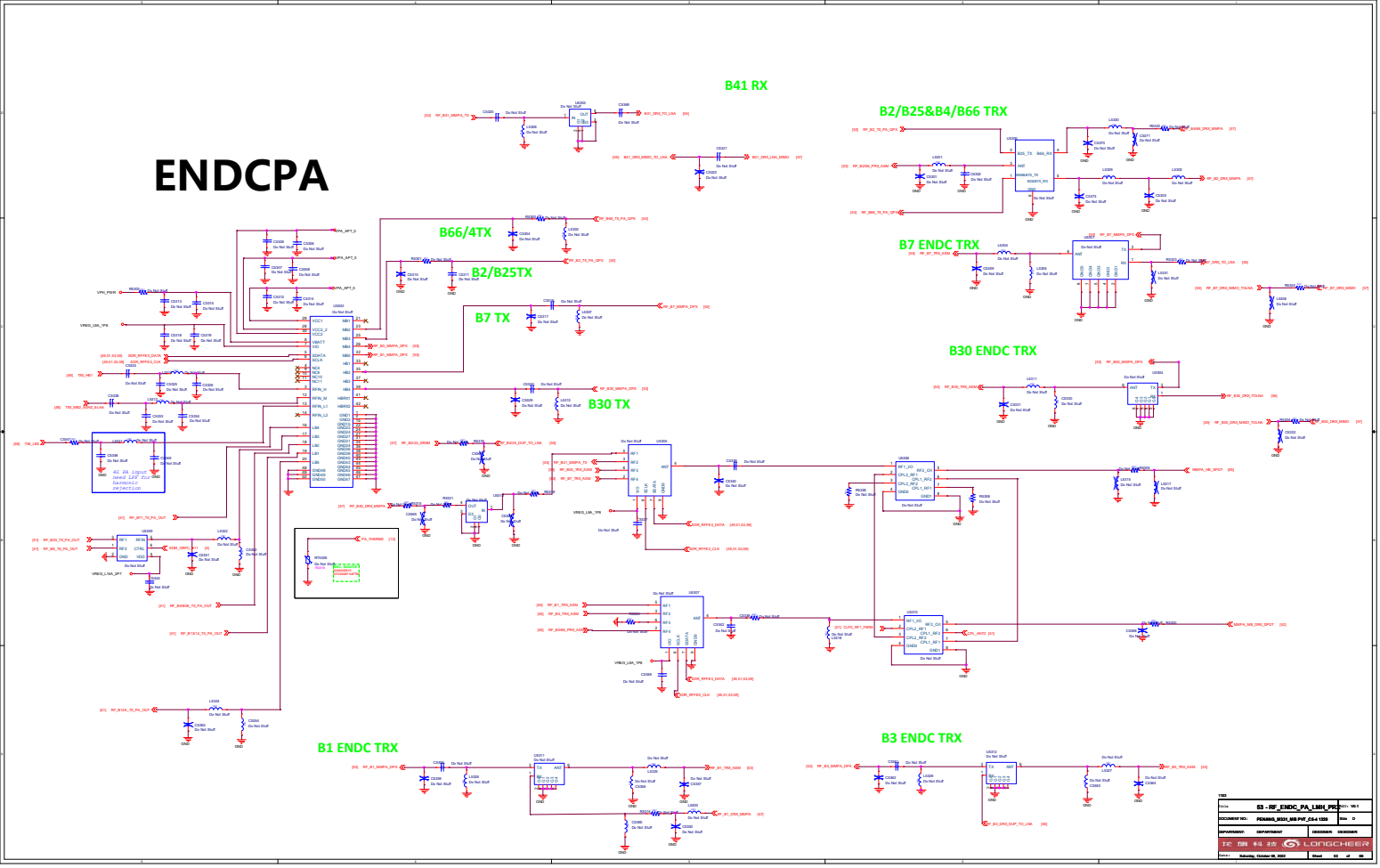

BAND39+B41 mimo

L+HB_LFEMD

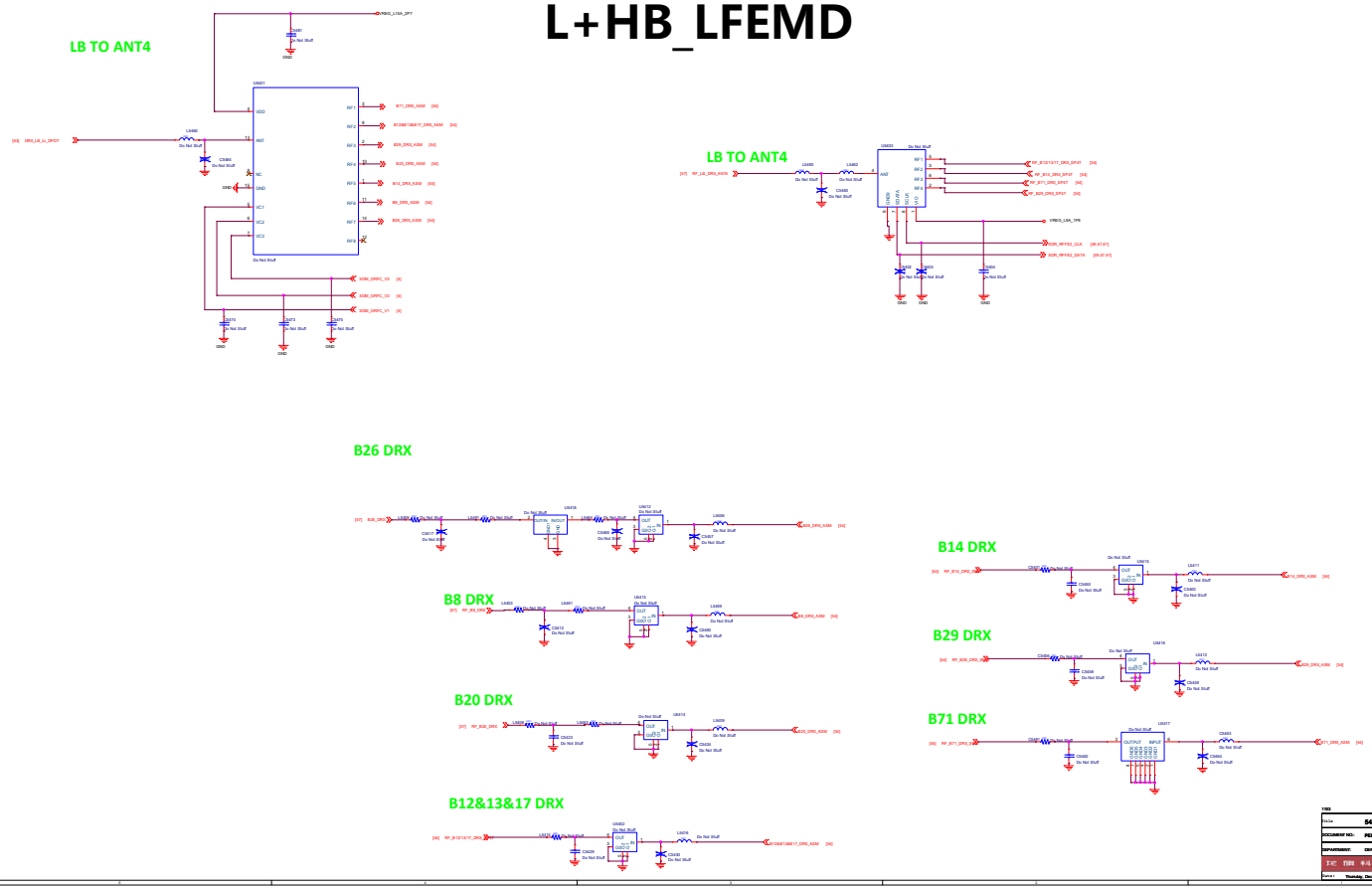

TITLE:		
Name	S4 - RF_LMH_DRX	REV. V6.1
DOCUMENT NO:	PEMAIN_8931_MB PVT_2.0-1.1000	Size D
DEPARTMENT: DEPARTMENT	DESIGNER: DESIGNER	
中国科技 LONGCHEER		
DATE: Thursday, December 08, 2022	Sheet 54 of 68	

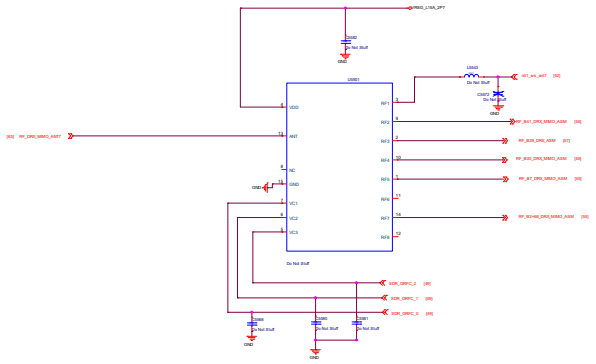

B30 DRX MIMO

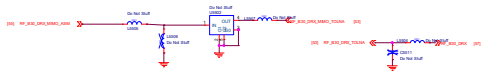

B38_B41 DRX

B7 DRX MIMO

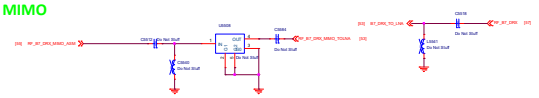

B2+B66 DRX MIMO

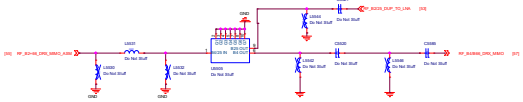

B3 DRX

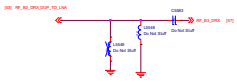

TITLE

Article	S5 - LTE_DRX_MIMO	REV. V0.3
DOCUMENT NO:	PENANG_8531_MB PVT_C0-4 1256	Rev: D
DEPARTMENT: DEPARTMENT	DESIGNER: DESIGNER	
龙旗科技 LONGCHEER		
DATE: Friday, October 28, 2022	Sheet 55 of 66	

QLN5030 LMHB LNA - DRX

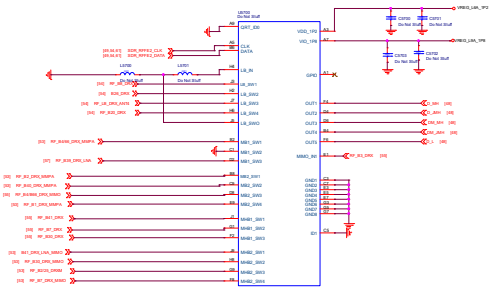

QLN5020 LB LNA - PRX

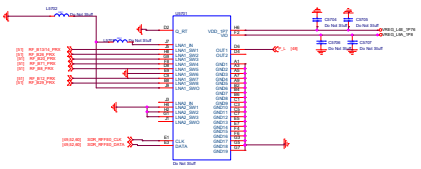

B39 DRX

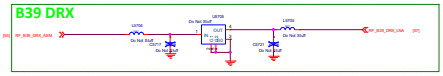

Title	S7 - QLN5030	REV.	V6.1
DOCUMENT NO:	PEMAIN_8031_MB PVT_C0-4 1300	Size	D
DEPARTMENT:	DEPARTMENT	DESIGNER:	DESIGNER
中興科技 LONGCHEER			
Date: Saturday, October 08, 2022		Sheet 57 of 68	

QET6105 CH1

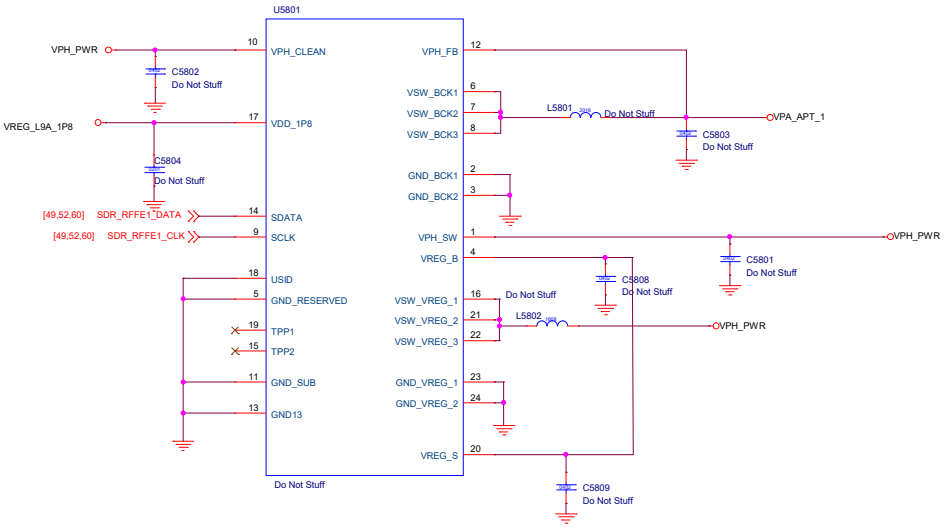

1103

Title	58 - QET6105_CH1	REV: V0.1
DOCUMENT NO.:	PENANG_M331_MB PVT_C5-4 1220	Size B
DEPARTMENT: DEPARTMENT	DESIGNER: DESIGNER	
龙旗科技 LONGCHEER		
Date: Saturday, October 08, 2022	Sheet 58 of 66	

QET4101 CH0

PWR OUT FOR 4G-MMPA

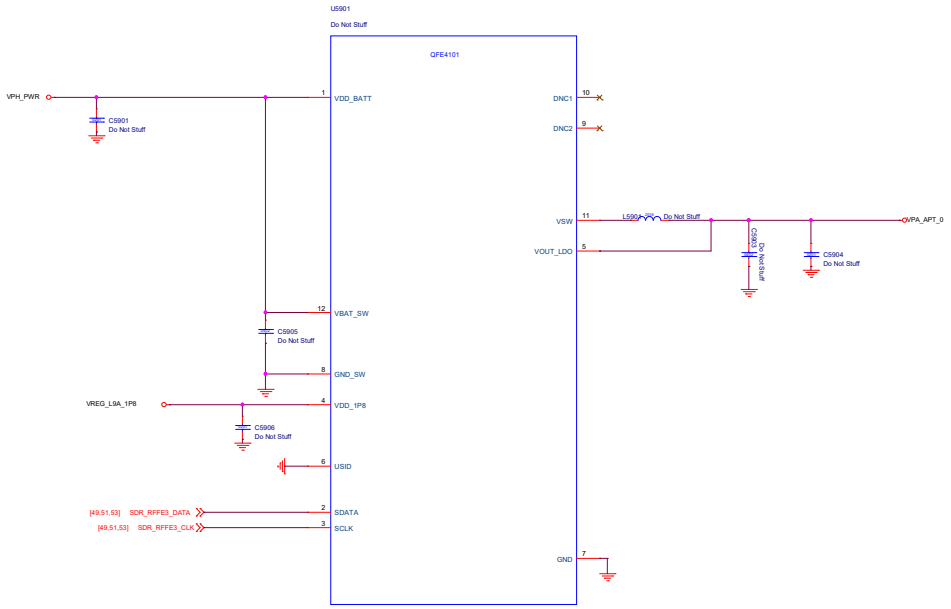

1103

Title	59 - QET4101 CH0	REV: V0.1
DOCUMENT NO.:	PENANG_M331_MB PVT_C5-4 1228	Size C
DEPARTMENT: DEPARTMENT		DESIGNER: DESIGNER
龙旗科技 LONGCHEER		
Date: Saturday, October 08, 2022		Sheet 59 of 66

N77/78 PA_Moudle

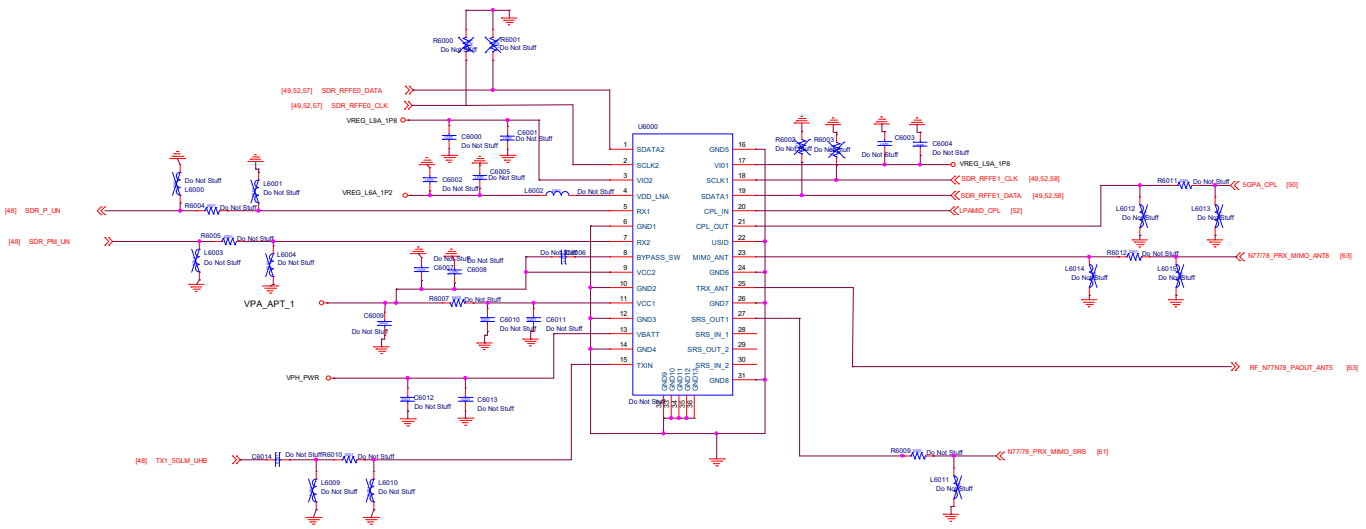

1103

Title	60 - N77-PA-1T2R	REV: V0.1
DOCUMENT NO.:	PENANG_M331_MB PVT_C5-4 1228	Size C
DEPARTMENT:	DEPARTMENT	DESIGNER: DESIGNER
龙旗科技 LONGCHEER		
Date: Saturday, October 08, 2022	Sheet 60 of 66	

N77/N78 DRX_0

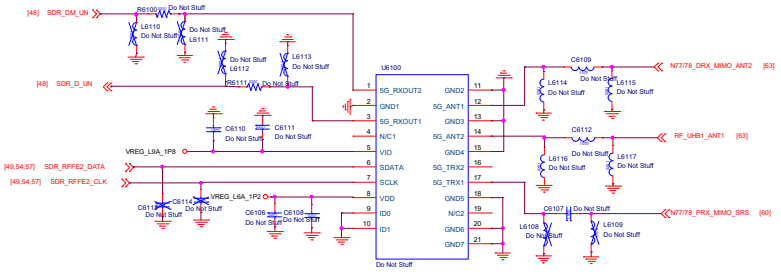

1103

Title	61 - N77-LFEM-2R	REV: V0.1
DOCUMENT NO.:	PENANG_M331_MB PVT_C5-4 1228	Size C
DEPARTMENT: DEPARTMENT		DESIGNER: DESIGNER
龙旗科技 LONGCHEER		
Date: Saturday, October 08, 2022	Sheet 61 of 66	

1103

Title	62 - TBD	REV: V0.1	
DOCUMENT NO.:	PENANG_M331_MB PVT_C5-4 1220	Size C	
DEPARTMENT:	DEPARTMENT	DESIGNER:	DESIGNER
龙旗科技 LONGCHEER			
Date:	Monday, September 05, 2022	Sheet 62 of 66	

ANT0 LMB

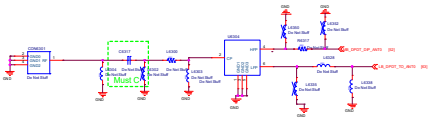

ANT1 HB+UHB

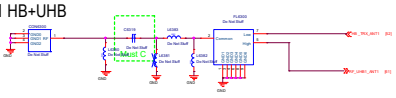

ANT2 UHB DRX MIMO

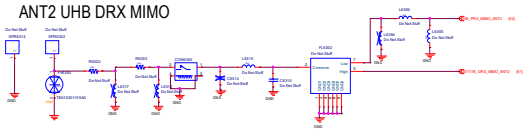

ANT2-SW
LTE PRX MIMO SP4T

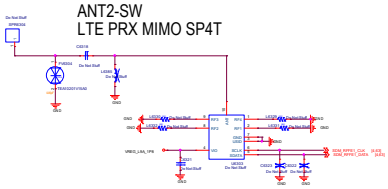

ANT3 UHB/HB DRX MIMO
NR DRX MIMO: n77/78
LTE DRX MIMO: B42,B7/40/41

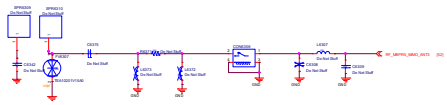

LB-ANT0/ANT4 DPDT

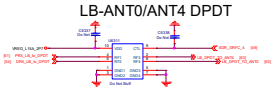

ANT4
GSM DRX: 850/900/1800/1900
WCDMA DRX: B1/2/4/5/8/19
LTE DRX: B1/2/3/4/5/7/8/12/13/17/18/19/20/26/28/38/39/40/41/66
ENDC LTE TRX: B1/3/7/40/41/66
ENDC NR TRX: n1/3/7/40/41/66

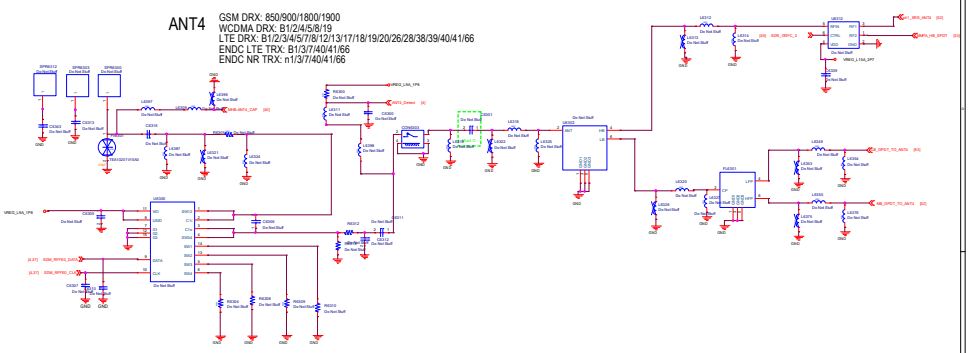

ANT5 UHB
NR TRX: n77/78

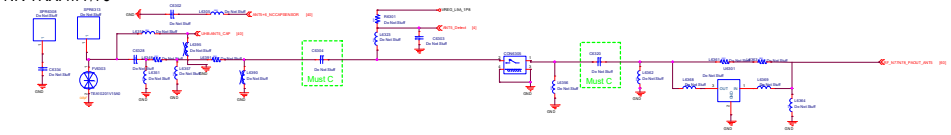

ANT7
MHB+UHB DRX MIMO
LTE DRX MIMO: B1/3/4/7/40/41/42/66
LTE PRX:32
NR refarmed : n1/2/3/7/38/40/41/66
NR : n77/78

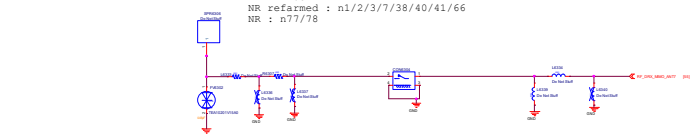

同轴双线夹

ANT8
MHB+UHB PRX MIMO
LTE DRX MIMO: B1/3/4/7/40/41/42/66
LTE PRX:32
NR refarmed : n1/2/3/7/38/40/41/66
NR : n77/78

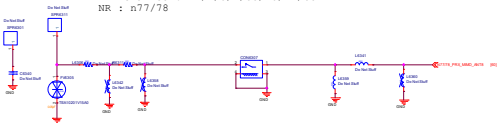

ANT7_SW
5G MIMO2 SP4T

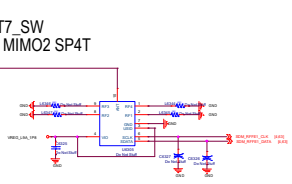

Size	03 - ANT	REV: V0.1
DOCUMENT NO:	PRM06_W20_MB-FVT_C04 1200	Sht Cookie
DEPARTMENT:	DEPARTMENT	DESIGNER: DESIGNER
深圳市龙旗科技股份有限公司 LONGCHEER		
Date:	Saturday, October 08, 2022	Sheet 03 of 08

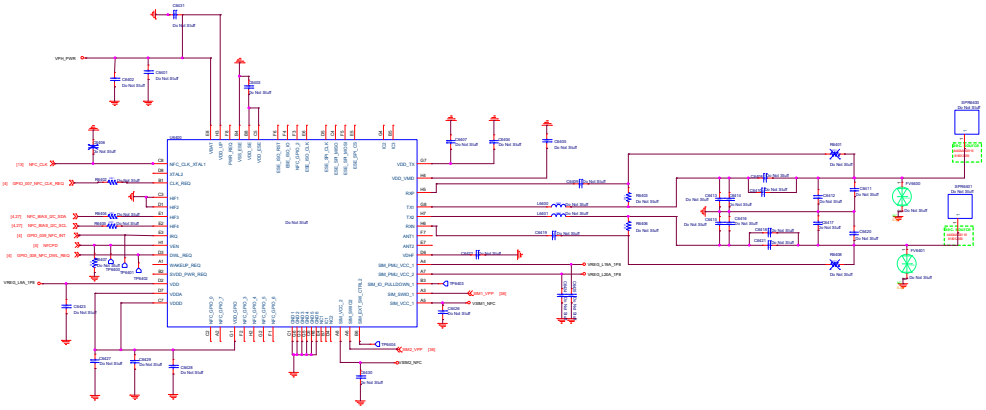

TITLE:

Title:	04 - NFC	REV: V6.1
DOCUMENT NO:	PEM8M0_8031_M0 PVT_C0-0 1300	Size: D
DEPARTMENT:	DEPARTMENT	DESIGNER: DESIGNER
中勝科技 LONGCHEER		
Date: Saturday, October 08, 2022		Sheet 04 of 08

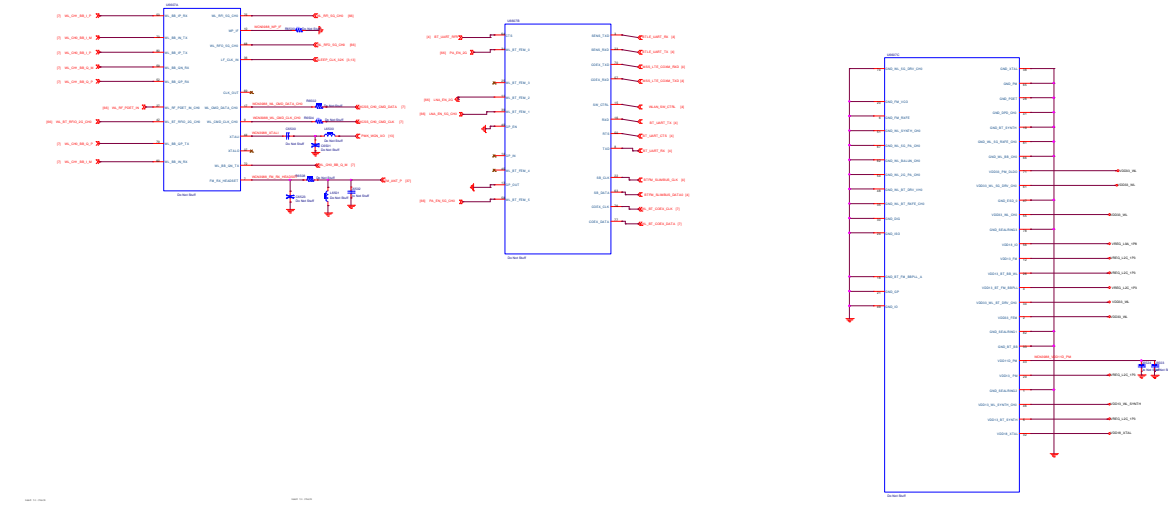

PMIC Rail	Pin Name	Pin Number	Peak current at pin(mA)
1.3V_RFA	VDD13_RT_RB_WL	26	120
	VDD13_WL_SYNTH_CBO	44	40
	VDD13_RT_SYNTH	5	15
	VDD10_PM	43	20
	VDD13_PM	12	15
	VDD13_RT_PM_BBPLL	4	10
	VDD13_RT_PM	29	20
3.3V_CBO	VDD33_WL_CBO	55	450
	VDD33_WL_5GHz_DRV_CBO	61	70
	VDD33_WL_RT_DRV_CBO	34	65
	VDD33_PM_SLDO	71	5
	VDD33_PBM	2	1
1.8V_IO	VDD18_IO	56	15
1.8V_RO	VDD18_XTAL	32	40

GPS

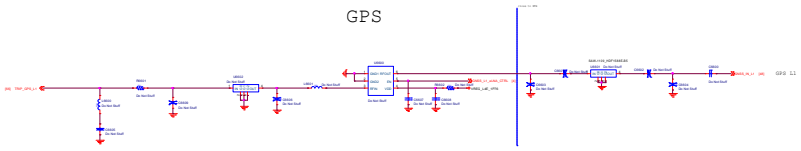

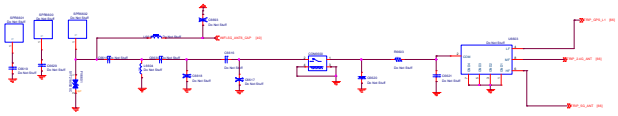

2.4G WIFI

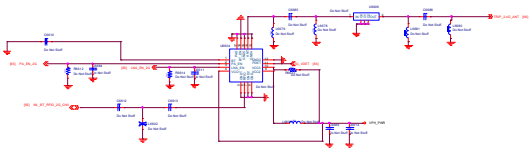

VDET

5G WIFI

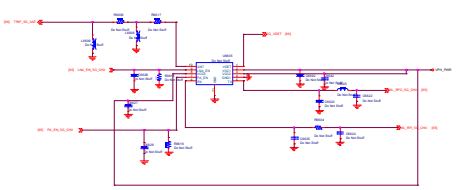

Title	GB - WCN_BGT		Rev. MB-F
Document No.	PRIAMS_W331_MBP07_DB-A1000		Rev. 0
Sheet Name	GPS/2.4G/5G/VDET	Sheet Size	A3 Landscape
Date	Thursday, December 05, 2024	Sheet	08 of 08